MAHLE Industrialfiltration is now Filtration Group. For more information, visit www.fluid.filtrationgroup.com

Dust filter cartridge
328 NZC

Ø 328 mm

1. Features

Star-pleated Filtration Group dust cartridges are used to separate dust from gases. Dusty air or gas impinged to the outside of the cartridges and the cleaned airflow exits at the top. The retained dust can be cleaned with a rotating wing by means of a cleaning pulse or by jet pulse.
Regular and extensive performance testing of all materials used in production is the key to the consistently high quality of Filtration Group dust cartridges. Additional applications tests are carried out both on the test stands in our own development laboratory and on the customer's site. The results of these tests form the backbone of innovative products, mature production methods and unmatched operational reliability.

Characteristics

- High separation efficiency
- Uniform pleat distribution
- Reliable operation
- Large filter surface in a very small space
- Optimised filter materials
- Installation on the clean side
- Worldwide sales

2. Technical Data

Material

Inner core: Galvanized steel (standard) or stainless steel V4A - AISI 316

End caps: Galvanized steel (standard) or stainless steel V4A - AISI 316

Seal: PUR soft material

Filter material: Ti 07/1 - Electrostatical conductive polyester Fleece with PTFE membrane
Ti 08 - Electrostatical conductive polyester fleece
Ti 15 - polyester fleece
Ti 19/2 - Cellulose/polyester carrier with PP meltblown
Ti 70 - Cellulose with 30 % polyester fibres
Other filter materials on request

Cleaning

Nozzle: Rotating wing RLD Rein or multi-jet nozzle G1

Cleaning pressure: 3 bar to 4 bar (max. 4.5 bar) or 5 bar to 6 bar

Differential pressure: max. 15 mbar

Technical data is subject to change without notice!

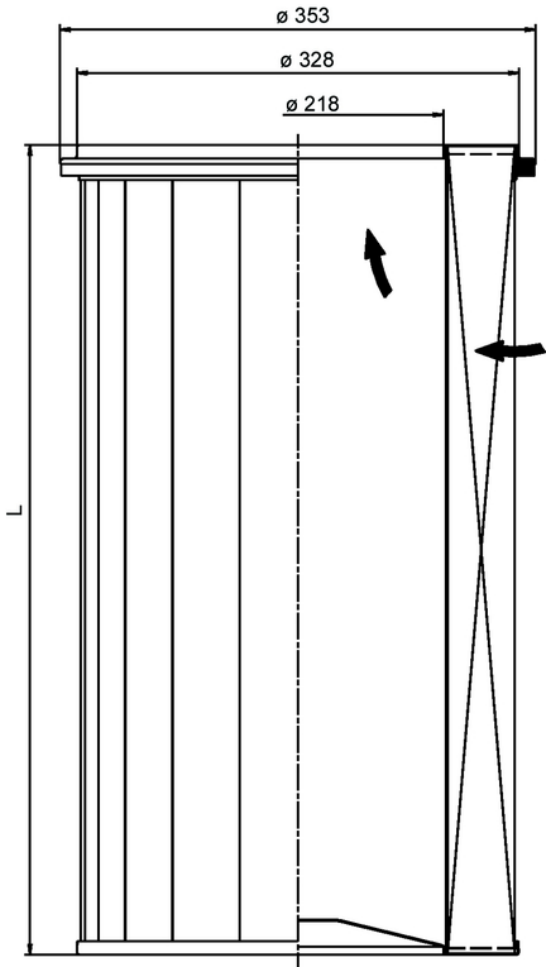

3. Order numbers

Order numbers	Type designation	Length L** [mm]	Filter material	Filter surface [m²]	max. volume flow*** [m³/h]	Max. operating temperature [°C]	electro-static-al con-ductive
78386948	852 781 Ti 07-7.5	600	Ti 07/1	7.5	750	80	yes
79394172	852 781 Ti 07-7.5 V4A*						
78361511	852 781 Ti 08-10		Ti 08	10			
77938046	852 781 Ti 15-10		Ti 15				no
79354507	852 781 Ti 19-7.5		Ti 19/2	7.5			
78359788	852 781 Ti 70-13		Ti 70	13			
79355587	852 781 Ti 15-10 Band		Ti 15	10			no
78387920	852 781 Ti 19-7.5 Band		Ti 19/2	7.5			

* Version made of stainless steel V4A

** Other cartridge lengths available on request

*** These values may vary depending on the nature of the dust and the composition of the gas.

4. Installation

The dust removal cartridges (diameter: 328 mm) are fastened to the filter plate on the clean air side by means of retainers.
A hole with a diameter of 330 mm must be drilled in the filter plate.

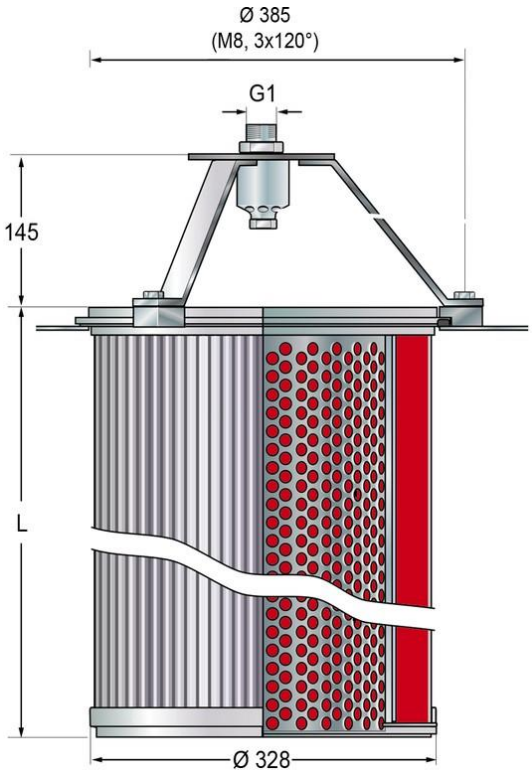

Multi-jet nozzle

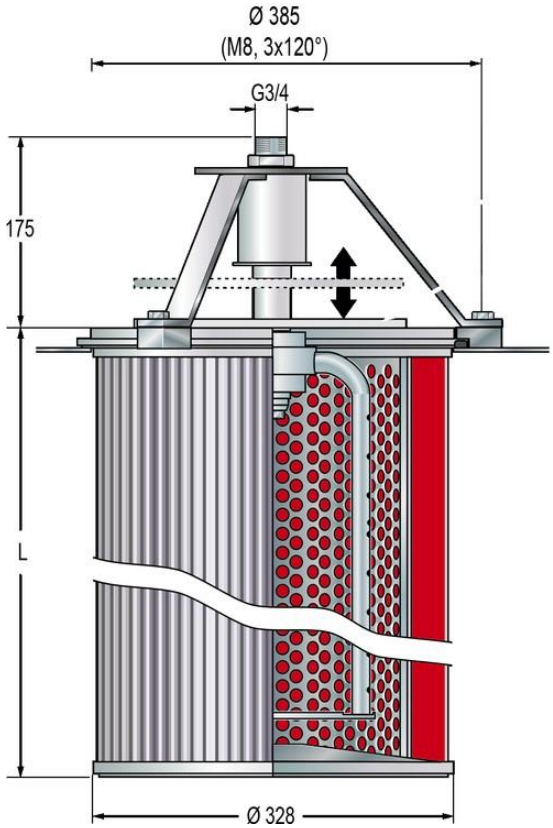

Rotating wing

5. Accessories

Order number	Designation
79356734	Multi-jet nozzle MJD-32 00 Rein A1
78296758	Rotating wing RLD-32 08 Rein A1
78296857	Rotating wing RLD-32 06 Rein V1

6. Cleaning

Two cleaning systems are available for dust filter cartridges with a diameter of 328 mm

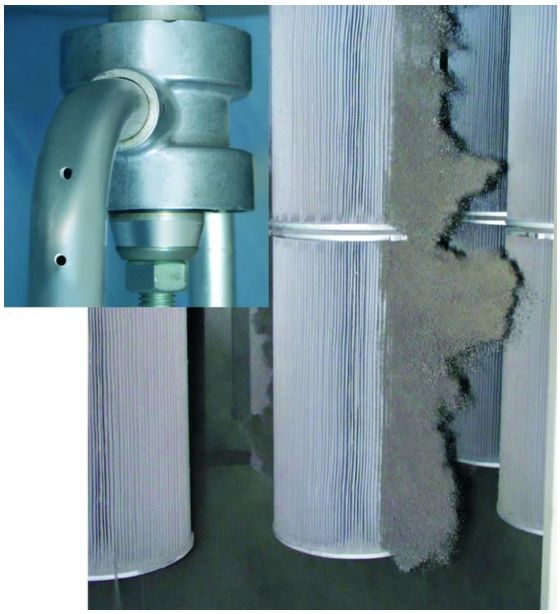

Filtration Group multi-jet nozzle

The optimised geometry of the multi-jet nozzle guarantees excellent cleaning results with a significantly lower noise level.
The multi-jet nozzle is available from Filtration Group in aluminium or stainless steel. It can also be purchased as part of the Filtration Group MJD cleaning unit, comprising the nozzle, a tripod and various small assembly components. The stirrup maintains an optimum distance from the cartridge to ensure maximum cleaning efficiency.

Filtration Group rotating wing

The dam plate closes during cleaning and the rotating wing begins to turn. The large number of compressed air jets that are discharged from the wing elements guarantee gentle, uniform cleaning over the complete cartridge length. The simultaneous vibratory movement in the pleats generates a significant improvement in cleaning efficiency, particularly with critical dusts. Each pleat is cleaned several times over. The filter life is optimised as a result of the rotating wing.

7. Design

Please contact us for detailed technical information, any open questions and for general expert advice. Completion of the relevant questionnaire would facilitate in the coordination of all important parameters.
Comprehensive documentation on our product range, cleaning units and cartridges can be provided.

Filtration Group GmbH
Schleifbachweg 45
D-74613 Öhringen
Phone +49 7941 6466-0
Fax +49 7941 6466-429
fm.de.sales@filtrationgroup.com
www.fluid.filtrationgroup.com
70349867.04/2019