TBM 129 Series Outline Drawings

TBM 129

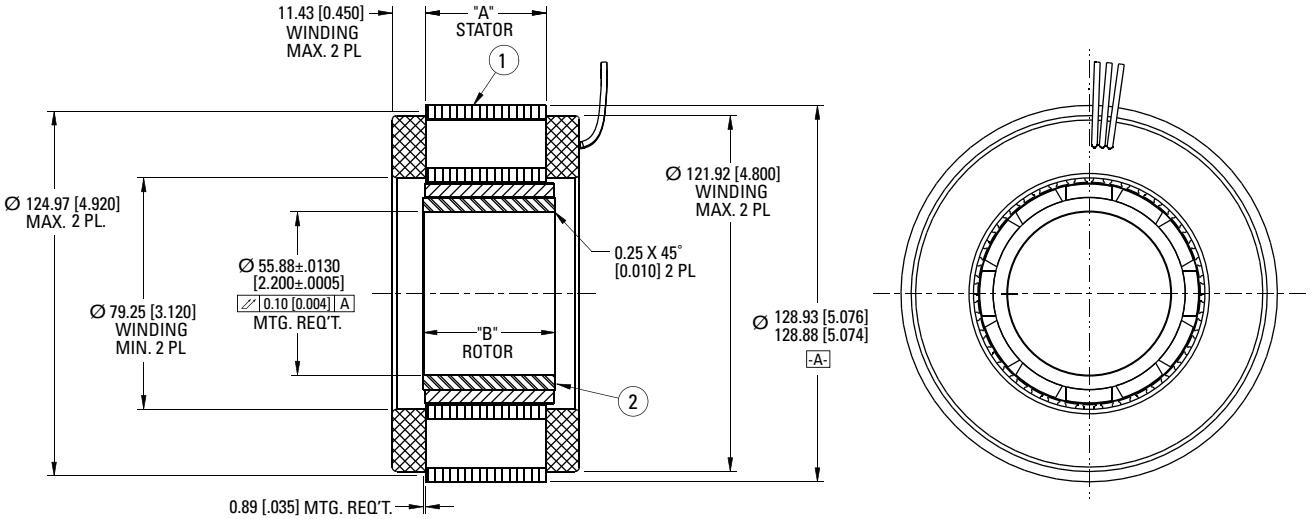

TBMS 129

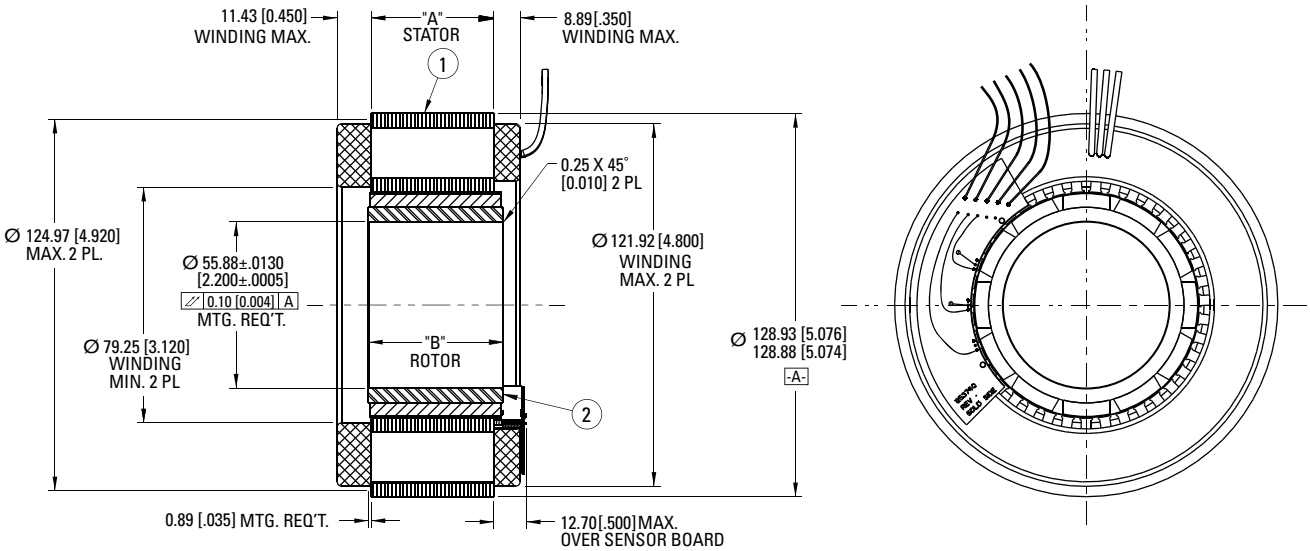

MOTOR LEADS:
#16 AWG, TEFLON® COATED, PER MIL-W-22759/11
3 LEADS - 400 [15.75] MIN. LONG EACH
1-RED, 1-WHITE, & 1-BLACK
MIN. MOTOR LEAD BEND RADIUS 7.62 [0.30]

SENSOR LEADS:
#26 AWG, TYPE "ET", TEFLON® COATED, PER MIL-W-16878
5 LEADS 400 [15.75] MIN. LONG EACH
1-BLUE, 1-BROWN, 1-GREEN, 1-ORANGE, & 1-YELLOW
MIN. SENSOR LEAD BEND RADIUS 3.90 [0.15]

Notes:
1. All dimensions are in mm [inches]
2. Motor supplied as two separate components: ①armature & sensor assembly and ②field assembly

MODEL NUMBER	"A" mm [inch]	"B" mm [inch]
TBM(S)-12913	13.33 ±0.25 [0.525 ±0.01]	17.40 [0.685]
TBM(S)-12941	41.28 ±0.25 [1.625 ±0.01]	45.35 [1.785]
TBM(S)-12955	54.61 ±0.25 [2.150 ±0.01]	58.67 [2.310]

TBM 129 Series Performance Data

TBM(S) 129 Series Performance Data and Motor Parameters

Motor Parameter	Symbol	Units	TOL	TBM(S)-12913-X		TBM(S)-12941-X		TBM(S)-12955-X	
				A	B	A	B	A	B
Continuous Stall Torque*	Tc	N-m	NOM	2.87	2.89	8.30	7.66	10.4	9.88
		Lb-Ft		2.12	2.13	6.12	5.65	7.69	7.29
Continuous Current	Ic	Adc	NOM	12.5	20.8	17.0	18.3	16.3	18.1
		Arms		10.2	17.0	13.9	14.9	13.3	14.8
Peak Stall Torque* (25°C winding temp)	Tp	N-m	NOM	11.0	7.36	27.1	24.4	36.2	31.0
		Lb-Ft		8.12	5.43	20.0	18.0	26.7	22.8
Peak Current	Ip	Adc	NOM	57.0	57.0	57.0	57.0	57.0	57.0
		Arms		46.5	46.5	46.5	46.5	46.5	46.5
Rated Cont Power*	P Rated	Watts	NOM	505	505	865	830	920	585
Speed at Rated Power	N Rated	RPM	NOM	2490	2505	1520	580	1190	625
Design Voltage	Vbus	Vdc	NOM	100	48.0	100	48.0	100	48.0
	Vac	Vrms	NOM	70.7	33.9	70.7	33.9	70.7	33.9
Torque Sensitivity at Temp*	Kt (hot)	N-m / Adc	+/-10%	0.241	0.145	0.509	0.437	0.666	0.572
		Lb-Ft / Adc		0.178	0.107	0.376	0.322	0.492	0.422
		N-m / Arms	+/-10%	0.296	0.177	0.624	0.535	0.816	0.701
		Lb-Ft / Arms		0.218	0.131	0.460	0.394	0.602	0.517
Back EMF at Temp*	Kb (hot)	Vpk / kRPM	+/-10%	25.3	15.2	53.3	45.7	69.8	59.9
		Vrms / kRPM		17.9	10.7	37.7	32.3	49.3	42.4
Torque Sensitivity at 25°C	Kt (cold)	N-m / Adc	+/-10%	0.265	0.159	0.560	0.480	0.733	0.629
		Lb-Ft / Adc		0.196	0.117	0.413	0.354	0.541	0.464
		N-m / Arms	+/-10%	0.325	0.195	0.686	0.588	0.898	0.771
		Lb-Ft / Arms		0.240	0.144	0.506	0.434	0.662	0.569
Back EMF	Kb (cold)	Vpk / kRPM	+/-10%	27.8	16.7	58.6	50.3	76.8	65.9
		Vrms/kRPM		19.7	11.8	41.5	35.6	54.3	46.6
Motor Constant at 25°C	Km (cold)	N-m/√watt	+/-10%	0.443	0.460	1.12	1.10	1.35	1.33
		Lb-Ft/√watt		0.327	0.339	0.826	0.811	1.00	0.980
Motor Constant at Temp	Km (hot)	N-m/√watt	+/-10%	0.328	0.329	0.831	0.769	1.02	0.968
		oz-in/√watt		0.242	0.243	0.613	0.567	0.75	0.714
Resistance at 25°C	Rm	Ohms	+/- 10%	0.360	0.129	0.250	0.215	0.286	0.233
Inductance	Lm	mH	+/- 30%	0.60	0.22	0.92	0.68	1.2	0.88
Inertia*	Jm	Kg-m²		2.71E-04		7.21E-04		9.37E-04	
		Lb-Ft-s²		2.00E-04		5.32E-04		6.91E-04	
Weight*	Wt	Kg		1.32		3.17		4.05	
		Lbs		2.90		7.00		9.14	
Max Static Friction	Tf	N-m		0.127		0.346		0.450	
		Lb-Ft		0.0938		0.255		0.332	
Cogging Friction (Peak-to-Peak)	Tcog	N-m		0.071		0.216		0.285	
		Lb-Ft		0.0521		0.159		0.210	
Viscous Damping	Fi	N-m/ kRPM		4.24E-02		2.71E-01		4.06E-01	
		Lb-Ft / kRPM		3.12E-02		0.20		0.30	
Thermal Resistance*	TPR	°C / watt		1.55		1.20		1.14	
Number of Poles	P	-		12		12		12	

*Notes
1) Continuous Stall Torque and Rated Power assume ambient temperature of 25°C
2) Winding temp = 155°C for Kt and Kb hot
3) Inertia and weight assume max thru-bore
4) TPR assumes motor is housed and mounted to a 7.0" x 7.5" x 0.375" heat sink or equivalent
5) Peak Torques limited by lead wire gauge

TBM 129 Series Performance Curves

TBM(S)-12913-A
100 Vdc – 6 step

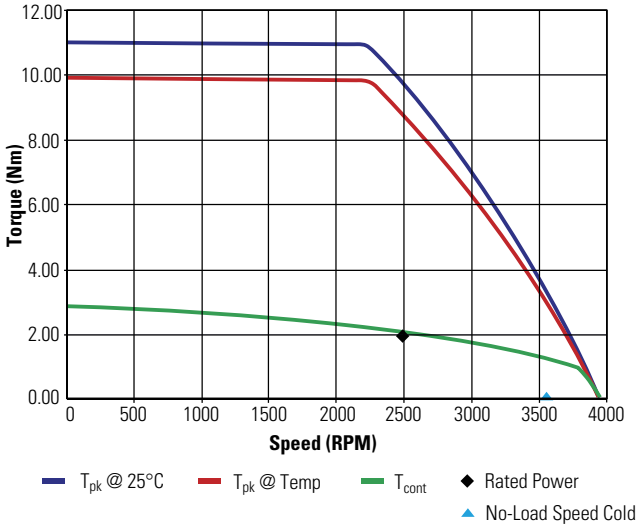

TBM(S)-12913-B
48 Vdc – 6 step

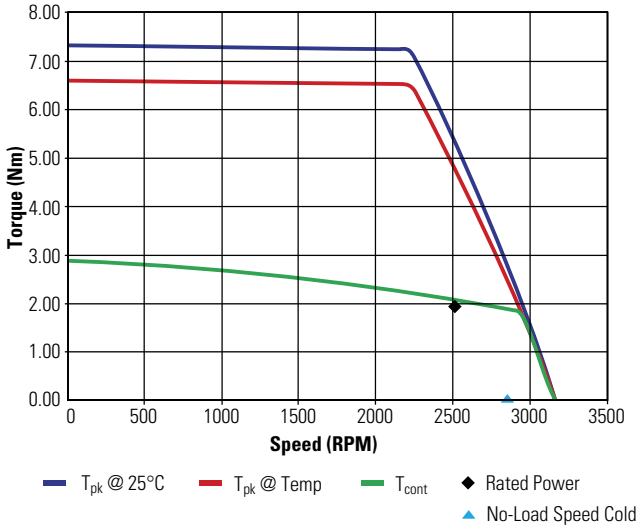

TBM(S)-12941-A
100 Vdc – 6 step

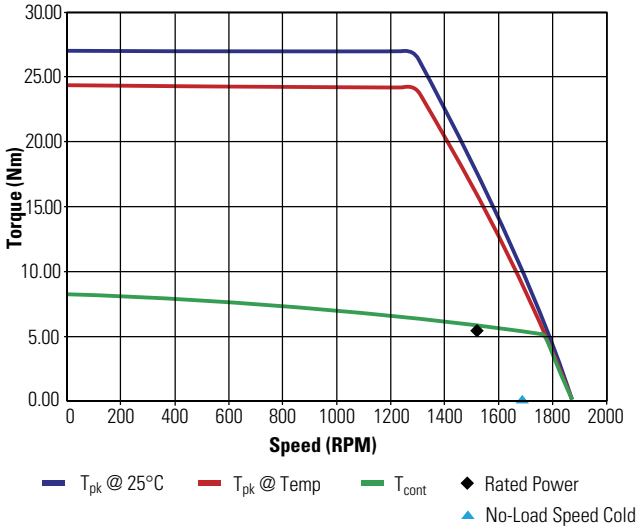

TBM(S)-12941-B
48 Vdc – 6 step

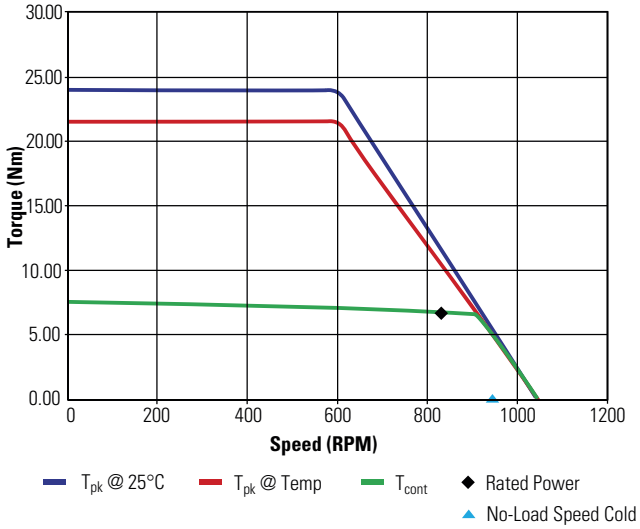

TBM(S)-12955-A
100 Vdc – 6 step

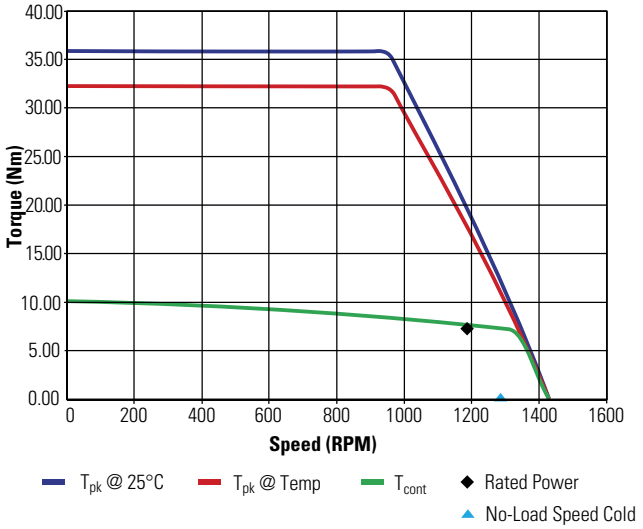

TBM(S)-12955-B
48 Vdc – 6 step

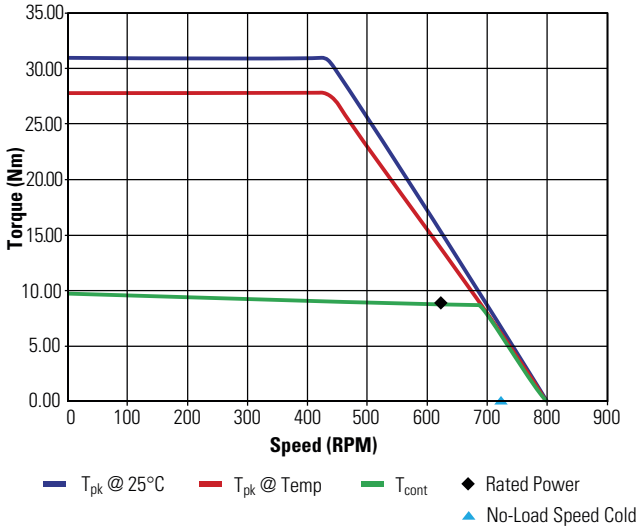

Notes: