TBM 76 Series Outline Drawings

TBM 76

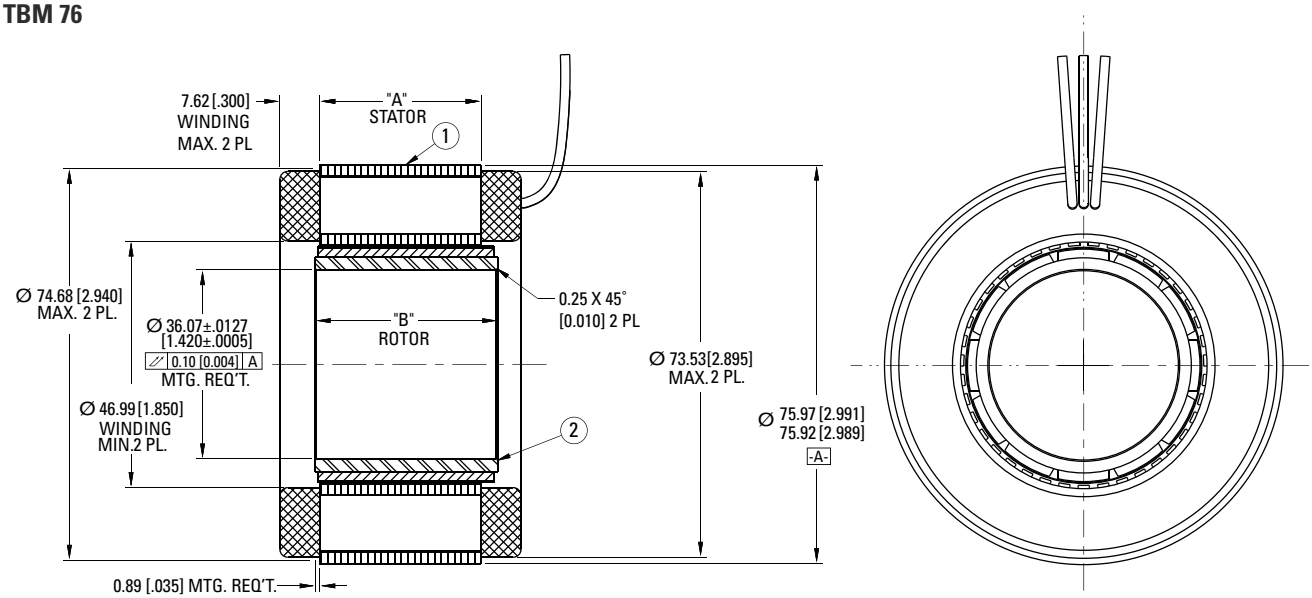

TBMS 76

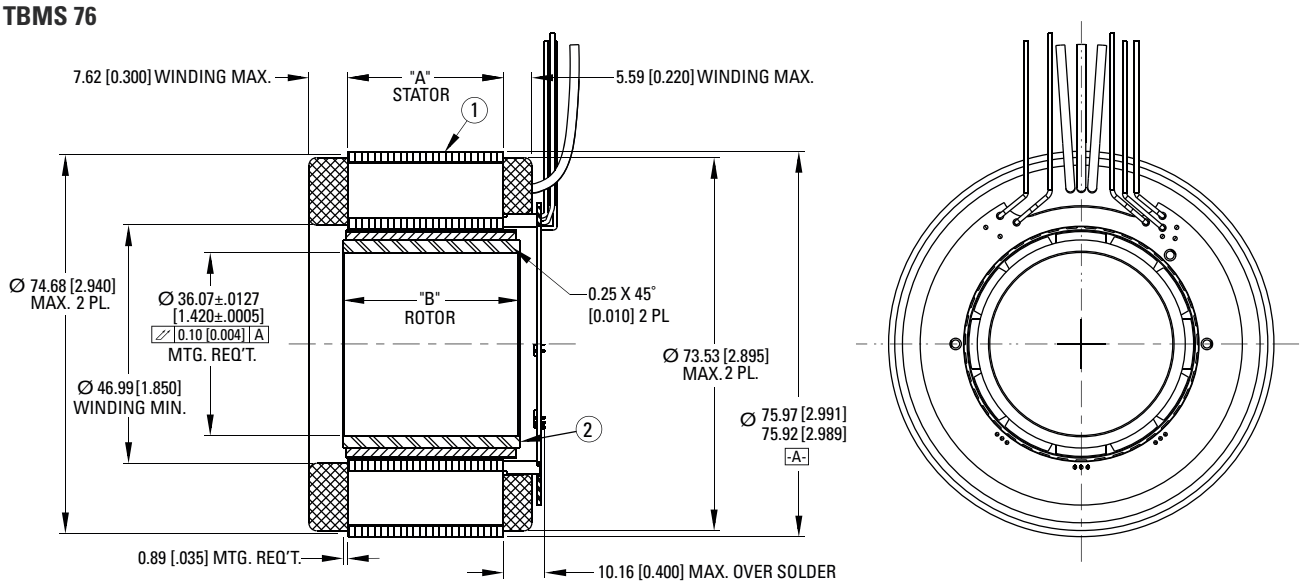

MOTOR LEADS:
#18 AWG, TEFLON® COATED, PER MIL-W-22759/11
3 LEADS - 400 [15.75] MIN. LONG EACH
1-RED, 1-WHITE, & 1-BLACK
MIN. MOTOR LEAD BEND RADIUS 6.90 [0.27]

SENSOR LEADS:
#26 AWG, TYPE "ET", TEFLON® COATED, PER MIL-W-16878
5 LEADS 400 [15.75] MIN. LONG EACH
1-BLUE, 1-BROWN, 1-GREEN, 1-ORANGE, & 1-YELLOW
MIN. SENSOR LEAD BEND RADIUS 3.90 [0.15]

Notes:
1. All dimensions are in mm [inches]
2. Motor supplied as two separate components: ①armature & sensor assembly and ②field assembly

MODEL NUMBER	"A" mm [inch]	"B" mm [inch]
TBM(S)-7615	15.24 ±0.25 [0.600 ±0.01]	19.30 [0.760]
TBM(S)-7631	30.73 ±0.25 [1.210 ±0.01]	38.40 [1.370]
TBM(S)-7646	46.23 ±0.25 [1.820 ±0.01]	50.29 [1.980]

TBM 76 Series Performance Data

TBM(S) 76 Series Performance Data and Motor Parameters

Motor Parameter	Symbol	Units	TOL	TBM(S)-7615-X		TBM(S)-7631-X		TBM(S)-7646-X	
				A	B	A	B	A	B
Continuous Stall Torque*	Tc	N-m	NOM	0.939	0.918	1.65	1.64	2.18	2.13
		oz-in		133	130	234	232	309	302
Continuous Current	Ic	Adc	NOM	10.5	14.3	10.9	13.0	11.8	14.4
		Arms		8.57	11.7	8.90	10.6	9.63	11.8
Peak Stall Torque* (25°C winding temp)	Tp	N-m	NOM	3.04	2.22	5.37	4.60	6.74	5.51
		oz-in		430	315	760	652	955	780
Peak Current	Ip	Adc	NOM	36.0	36.0	36.0	36.0	36.0	36.0
		Arms		29.4	29.4	29.4	29.4	29.4	29.4
Rated Cont Power*	P Rated	Watts	NOM	258	208	307	190	335	217
Speed at Rated Power	N Rated	RPM	NOM	3930	2560	2300	1210	1850	1025
Design Voltage	Vbus	Vdc	NOM	48.0	24.0	48.0	24.0	48.0	24.0
	Vac	Vrms	NOM	33.9	17.0	33.9	17.0	33.9	17.0
Torque Sensitivity at Temp*	Kt (hot)	N-m / Adc	+/-10%	0.093	0.066	0.156	0.130	0.192	0.153
		oz-in / Adc		13.1	9.36	22.1	18.4	27.1	21.7
		N-m / Arms	+/-10%	0.113	0.081	0.191	0.159	0.235	0.188
		oz-in / Arms		16.0	11.5	27.1	22.5	33.2	26.6
Back EMF at Temp*	Kb (hot)	Vpk / kRPM	+/-10%	9.69	6.92	16.3	13.6	20.1	16.0
		Vrms / kRPM		6.85	4.89	11.56	9.62	14.2	11.3
Torque Sensitivity at 25°C	Kt (cold)	N-m / Adc	+/-10%	0.102	0.073	0.172	0.143	0.211	0.169
		oz-in / Adc		14.4	10.3	24.3	20.2	29.9	23.9
		N-m / Arms	+/-10%	0.125	0.089	0.210	0.175	0.258	0.206
		oz-in / Arms		17.6	12.6	29.8	24.8	36.6	29.2
Back EMF	Kb (cold)	Vpk / kRPM	+/-10%	10.7	7.61	18.0	15.0	22.1	17.7
		Vrms/kRPM		7.53	5.38	12.7	10.6	15.6	12.48
Motor Constant at 25°C	Km (cold)	N-m/√watt	+/-10%	0.167	0.169	0.272	0.279	0.360	0.341
		oz-in/√watt		23.7	23.9	38.5	39.5	51.0	48.2
Motor Constant at Temp	Km (hot)	N-m/√watt	+/-10%	0.124	0.121	0.202	0.200	0.252	0.253
		oz-in/√watt		17.6	17.1	28.6	28.3	35.6	35.8
Resistance at 25°C	Rm	Ohms	+/- 10%	0.370	0.200	0.398	0.281	0.387	0.245
Inductance	Lm	mH	+/- 30%	0.40	0.20	0.60	0.42	0.63	0.40
Inertia*	Jm	Kg-m²		3.04E-05		5.64E-05		8.19E-05	
		oz-in-s²		4.31E-03		7.98E-03		1.16E-02	
Weight*	Wt	grams		435		738		1079	
		oz		15.3		26.0		38.0	
Max Static Friction	Tf	N-m		0.032		0.050		0.068	
		oz-in		4.49		7.09		9.70	
Cogging Friction (Peak-to-Peak)	Tcog	N-m		0.013		0.017		0.020	
		oz-in		1.79		2.35		2.90	
Viscous Damping	Fi	N-m/ kRPM		6.05E-03		1.60E-02		2.81E-02	
		oz-in / kRPM		8.57E-01		2.27		3.98	
Thermal Resistance*	TPR	°C / watt		2.11		1.83		1.62	
Number of Poles	P	-		12		12		12	

*Notes
1) Continuous Stall Torque and Rated Power assume ambient temperature of 25°C
2) Winding temp = 155°C for Kt and Kb hot
3) Inertia and weight assume max thru-bore
4) TPR assumes motor is housed and mounted to a 7.0" x 7.5" x 0.375" heat sink or equivalent
5) Peak Torques limited by lead wire gauge

TBM 76 Series Performance Curves

TBM(S)-7615-A
48 Vdc – 6 step

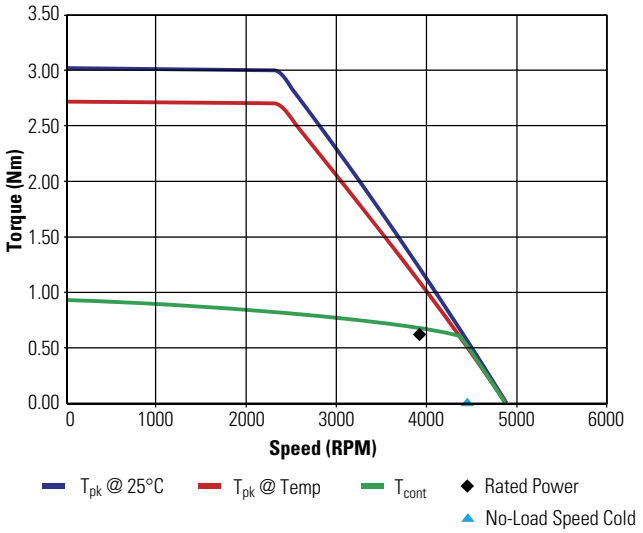

TBM(S)-7615-B
24 Vdc – 6 step

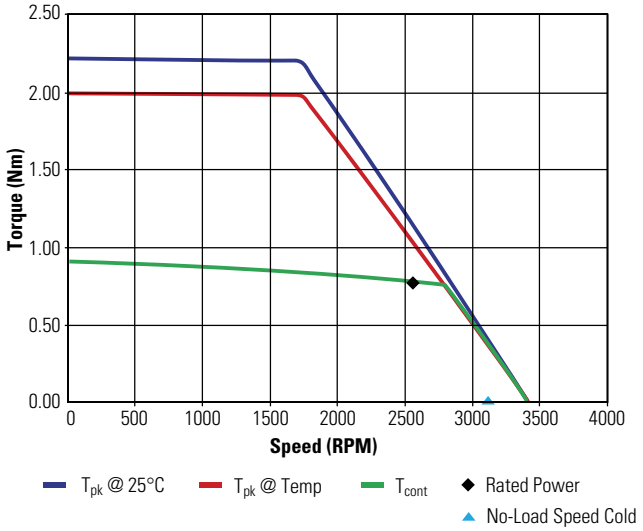

TBM(S)-7631-A
48 Vdc – 6 step

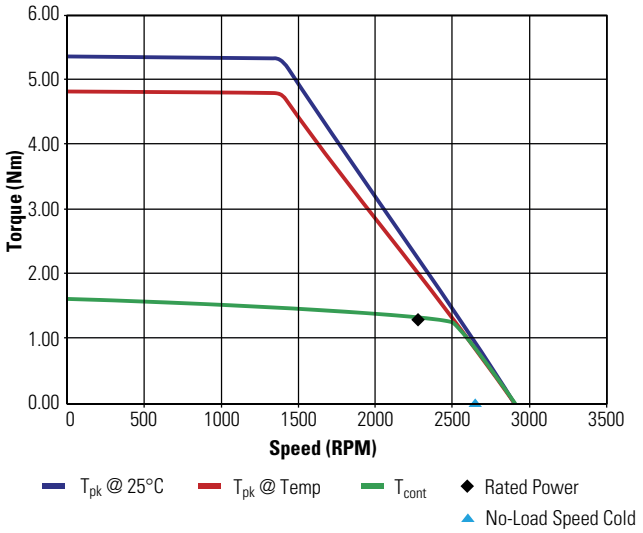

TBM(S)-7631-B
24 Vdc – 6 step

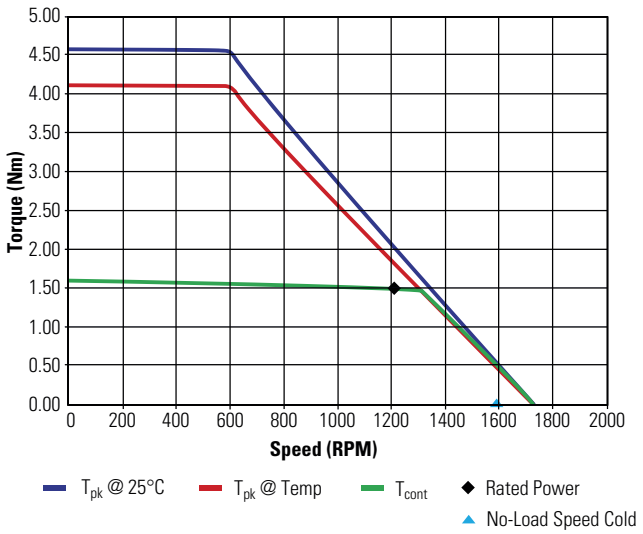

TBM(S)-7646-A
48 Vdc – 6 step

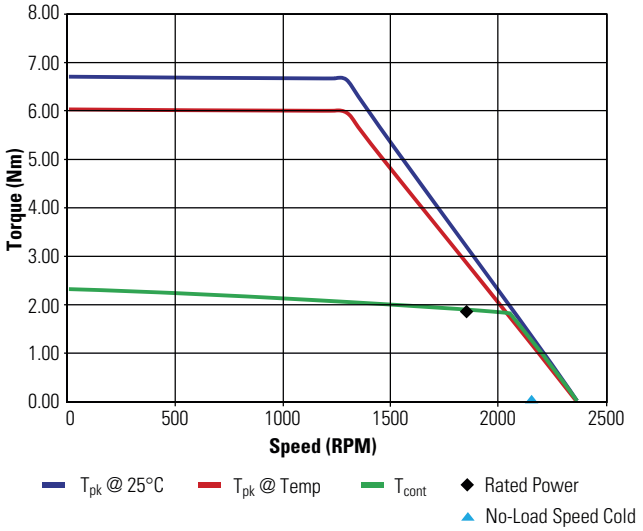

TBM(S)-7646-B
24 Vdc – 6 step

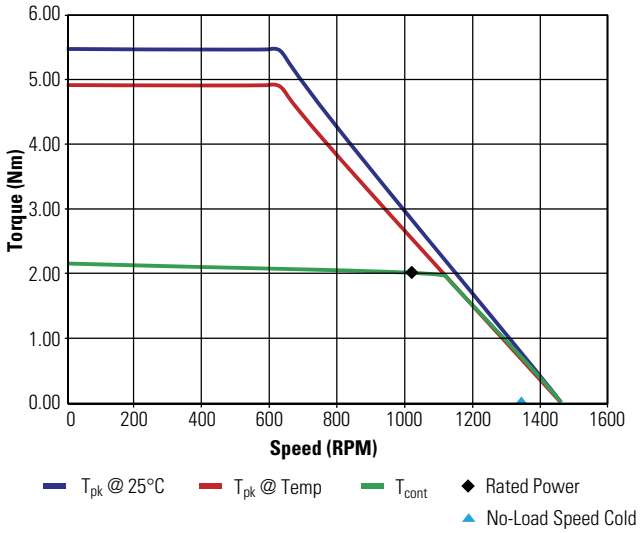

Notes: