Performance Summary

			AKD Servo Drive					Performance				
			AKD-x0030X	AKD-x0060X	AKD-x0120X	AKD-x0240X	AKD-x04807	Cont. Torque		Peak Torque		Maximum Speed
								(N-m)	lb-ft	(N-m)	lb-ft	
Cartridge DDR Motors	240 Volt Systems	C041A	•					4.57	3.37	12.3	9.09	1750
		C041B		•				4.52	3.33	12.2	9.01	2500
		C042A		•				8.25	6.08	22.2	16.4	1700
		C042B			•			8.45	6.23	22.8	16.8	2500
		C043A		•				11.1	8.20	30.0	22.1	1250
		C043B			•			11.2	8.23	30.2	22.2	2500
		C044A		•				13.9	10.3	37.4	27.6	1050
		C044B			•			14.1	10.4	37.9	28.0	2150
		C051A		•				11.7	8.66	30.2	22.3	1200
		C051B			•			11.9	8.77	30.6	22.6	2450
		C052C		•				16.9	12.5	43.1	31.8	950
		C052D			•			16.5	12.2	42.3	31.5	2050
		C053A			•			21.0	15.5	54.1	39.9	1350
		C053B				•		20.2	14.9	50.1	37.0	2500
		C054A			•			24.9	18.4	63.8	47.1	1200
		C054B				•		23.8	17.6	61.2	45.1	2350
		C061A			•			33.8	24.9	86.8	64.1	900
		C061B				•		32.6	24.1	75.6	55.7	1950
		C062C			•			48.4	35.7	117	86.5	700
		C062B				•		44.6	32.9	102	75.2	1400
		C063C			•			61.8	45.6	157	115	550
		C063B				•		59.0	43.5	136	100	1050
		C091A				•		50.2	37.0	120	88.2	600
		C092C				•		102	74.9	231	170	450
		C093C				•		139	103	317	233	350
		C131C				•		189	139	395	291	250
		C131B					•	190	140	396	292	450
		C132C				•		362	267	818	603	120
		C132B					•	361	266	759	560	225
		C133C				•		499	368	1070	791	100
		C133B					•	510	376	1016	749	175
	400 / 480 Volt Systems	CH041A	•					4.56	3.37	11.3	8.33	2500
		CH042A		•				8.26	6.09	19.0	14.0	2500
		CH043A		•				11.1	8.20	25.3	18.7	2500[1]
		CH044A		•				13.9	10.2	31.6	23.3	2250[1]
		CH051A	•					11.7	8.66	28.0	20.7	2500[1]
		CH052C	•					16.9	12.5	43.1	31.8	2100
		CH053A		•				21.0	15.5	54.1	39.9	2500[1]
		CH054A		•				24.9	18.4	63.8	47.1	2500[1]
		CH061A		•				33.8	24.9	86.8	64.1	1900[1]
		CH062C		•				48.4	35.7	117	86.5	1550[1]
		CH063C		•				61.8	45.6	157	115	1150[1]
		CH063B			•			59.0	43.5	136	100	2200[1]
		CH091A			•			50.2	37.0	120	88.2	1500[1]
		CH092C			•			102	74.9	231	170	1000[1]
		CH093C			•			139	103	317	233	800[1]
		CH131C				•		189	139	395	291	600[1]
		CH131B					•	190	140	396	292	1000[1]
		CH132C				•		362	267	818	603	300[1]
		CH132B					•	361	266	759	560	500[1]
		CH133C				•		499	368	1070	791	250[1]
		CH133B					•	510	376	1016	749	400[1]

1. Maximum speed at 480 Vac. For maximum speed at 400 Vac see performance curve.

Cartridge DDR™ Performance Data

C04xB

System Performance at 240 VAC C04xB Cartridge DDR™ Motor (High-Speed Winding) with AKD® Servo Drive Series Amplifiers

System Performance	Symbol	Units	C041B	C042B	C043B	C044B
Continuous Torque 100°C Rise[1,2,3]	Tc	lb-ft (N-m)	3.33 (4.52)	6.23 (8.45)	8.23 (11.2)	10.4 (14.1)
Cont. Line Current	Ic	amps RMS	4.69	9.19	9.15	9.53
Continuous Torque 70°C Rise[1,2,3]	Tc	lb-ft (N-m)	2.91 (3.94)	5.43 (7.36)	7.17 (9.73)	9.22 (12.5)
Cont. Line Current	Ic	amps RMS	4.09	8.01	7.98	8.50
Peak Torque	Tp	lb-ft (N-m)	9.01 (12.2)	16.8 (22.8)	22.2 (30.2)	28.0 (37.9)
Peak Line Current	Ip	amps RMS	14.1	27.6	27.5	28.6
Maximum Speed	N max	RPM	2500	2500	2500	2150
Weight	Wt	lb (kg)	9.00 (4.08)	12.5 (5.67)	16.0 (7.26)	19.5 (8.84)
Rotor Inertia	Jm	oz-in-sec^2 (kg-cm^2)	0.083 (5.86)	0.126 (8.87)	0.168 (11.9)	0.211 (14.9)

SYSTEM: C041B WITH AKD-x00606 AT 240 VAC

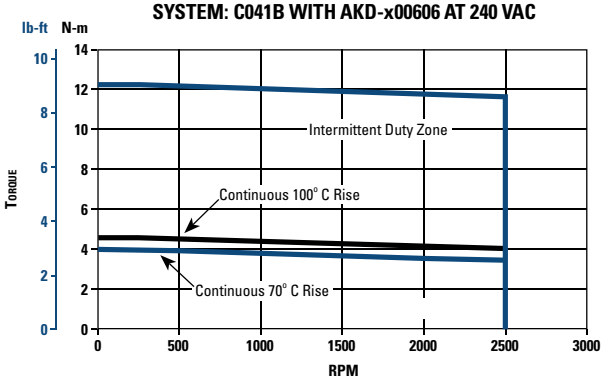

SYSTEM: C042B WITH AKD-x01206 AT 240 VAC

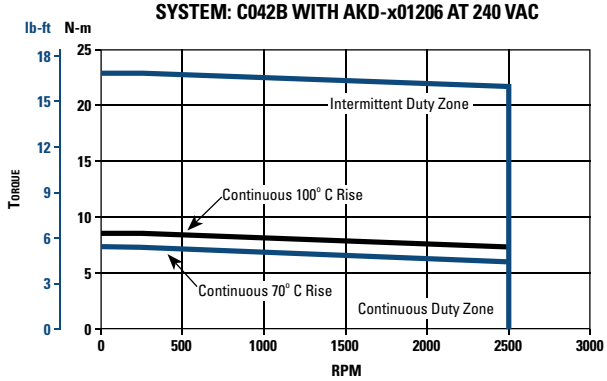

SYSTEM: C043B WITH AKD-x01206 AT 240 VAC

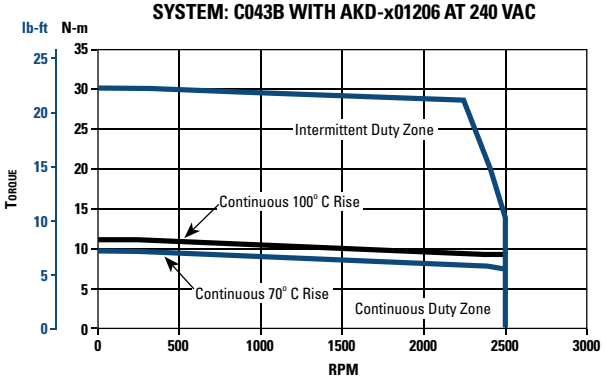

SYSTEM: C044B WITH AKD-x01206 AT 240 VAC

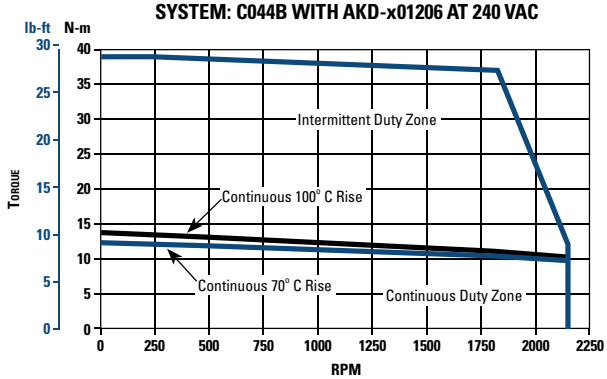

Notes:
1. At 40°C ambient.
2. Increase Tc by 1.06 times for 25°C ambient.
3. Temperature rise assumes a 12 x 12 x 0.50 inch aluminum mounting plate or equivalent.

Cartridge DDR™ Outline Drawings

C(H)04x

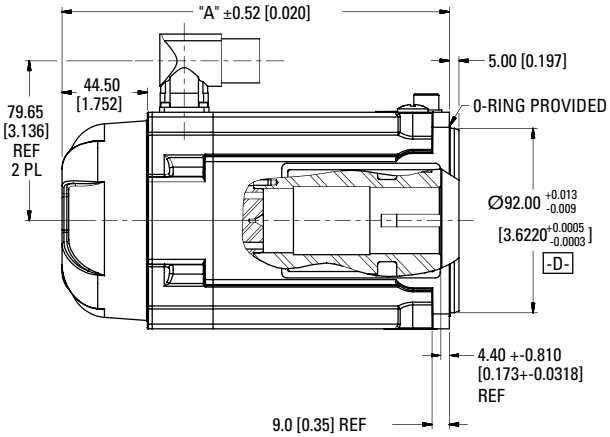

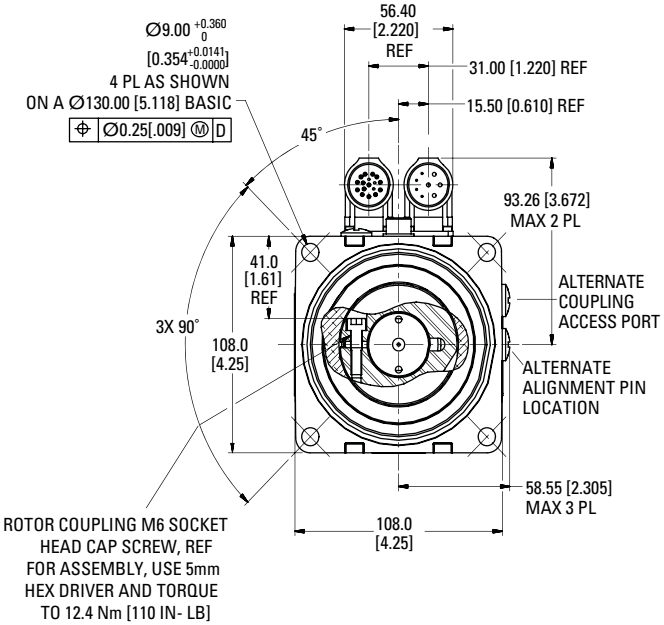

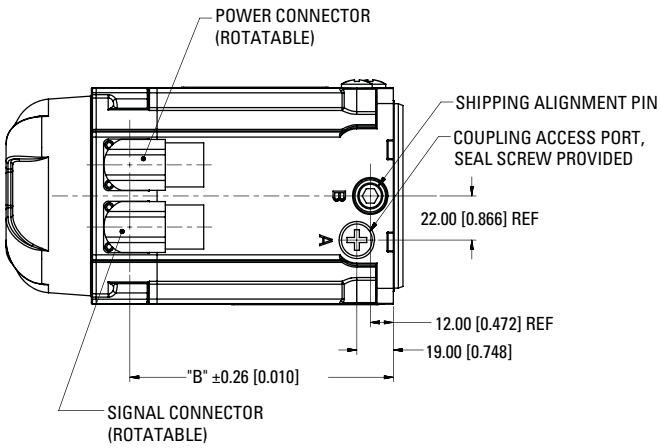

DIMENSION	C041	C042	C043	C044
"A"	171 (6.72)	202 (7.94)	233 (9.16)	264 (10.4)
"B"	107 (4.22)	138 (5.44)	169 (6.66)	200 (7.88)

Dimensions in mm [inches]

For machine interface detail, see page 36