Housed DDR D06X Performance Data

230 VAC

System Performance:		Symbols	Units	D061A/D061M	D062A/D062M	D063A/D063M
Peak Torque		Tp	lb-ft (N-m)	12.5 (16.9)	24.7 (33.5)	47.5 (64.4)
Continuous[1] Torque 40°C	Sine Encoder	Tc	lb-ft (N-m)	3.9 (5.3)	7.2 (9.8)	13.1 (17.7)
	Resolver	Tc	lb-ft (N-m)	4.3 (5.8)	8.0 (10.8)	14.5 (19.7)
Max. Operating Speed		N max	rpm (rps)	500 (8.3)	500 (8.3)	500 (8.3)
Sine Encoder System	Resolution	-	counts/rev	134,217,728	134,217,728	134,217,728
	Repeatability	-	arc/sec	< 1	< 1	< 1
	Accuracy	-	arc/sec	±26	±26	±26
Resolver System	Resolution	-	counts/rev	134,217,728	134,217,728	134,217,728
	Repeatability	-	arc/sec	±2.4	±2.4	±2.4
	Accuracy	-	arc/sec	±270	±270	±270
Mechanical:						
Weight		Wt	lb kg	20.8 (9.4)	25.0 (11.3)	30.5 (13.8)
Rotor Inertia		Jm	lb-ft-sec^2 (kg-m^2)	0.0045 (0.0061)	0.0052 (0.0071)	0.0064 (0.0086)
Static Friction Adder for Sealed Units		Tf	lb-ft (N-m)	1.8 (2.4)	1.8 (2.4)	1.8 (2.4)
Max. Dynamic Axel Compression Load (See page 11 for Details)		-	lbf (kg)	4,500 (2,040)	4,500 (2,040)	4,500 (2,040)

SYSTEM: D061 WITH AKD-■00606 AT 230 VAC

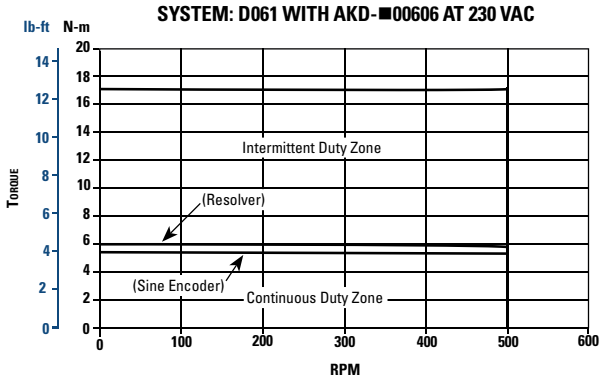

SYSTEM: D062 WITH AKD-■00606 AT 230 VAC

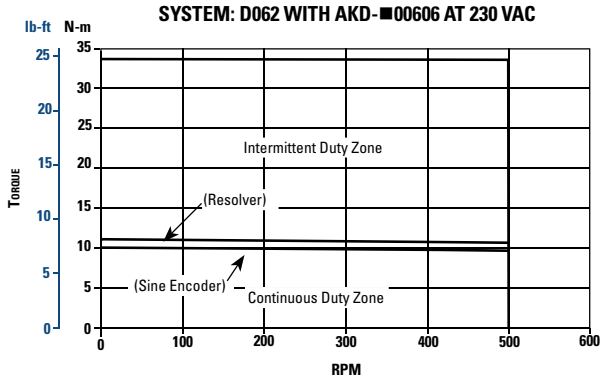

SYSTEM: D063 WITH AKD-■00606 AT 230 VAC

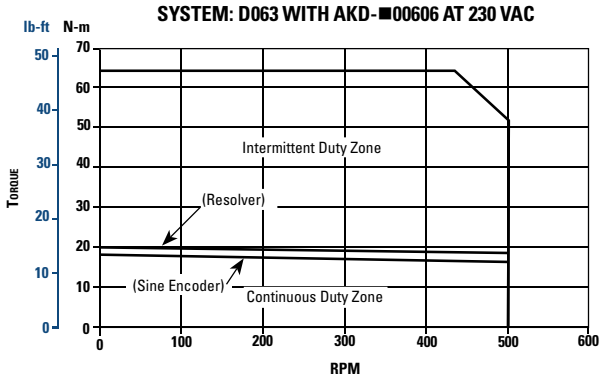

Notes:
1. For 25°C ambient, multiply Tc by 1.06.
2. Curves for 230 V applicable to single or three phase input power.

400/480 VAC

System Performance:		Symbols	Units	DH061A/DH061M	DH062A/DH062M	DH063A/DH063M
Peak Torque		Tp	lb-ft (N-m)	12.5 (16.9)	24.7 (32.8)	47.5 (64.4)
Continuous[1] Torque 40°C	Sine Encoder	Tc	lb-ft (N-m)	3.9 (5.3)	7.2 (9.8)	13.1 (17.7)
	Resolver	Tc	lb-ft (N-m)	4.3 (5.8)	8.0 (10.8)	14.5 (19.7)
Max. Operating Speed 400/480 V 3 Phase		N max	rpm (rps)	800 (13.3)	800 (13.3)	800 (13.3)
Sine Encoder System	Resolution	-	counts/rev	134,217,728	134,217,728	134,217,728
	Repeatability	-	arc/sec	< 1	< 1	< 1
	Accuracy	-	arc/sec	±26	±26	±26
Resolver System	Resolution	-	counts/rev	134,217,728	134,217,728	134,217,728
	Repeatability	-	arc/sec	±10	±10	±10
	Accuracy	-	arc/sec	±270	±270	±270
Mechanical:						
Weight		Wt	lb (kg)	20.8 (9.4)	25.0 (11.3)	30.5 (13.8)
Rotor Inertia		Jm	lb-ft-sec^2 (kg-m^2)	0.0045 (0.0061)	0.0052 (0.0071)	0.0064 (0.0086)
Static Friction Adder for Sealed Units		Tf	lb-ft (N-m)	1.8 (2.4)	1.8 (2.4)	1.8 (2.4)
Max. Dynamic Axel Compression Load (See Page 11 For Details)		-	lbf (kg)	4,500 (2,040)	4,500 (2,040)	4,500 (2,040)

SYSTEM: DH061 WITH AKD-■00607 AT 400/480 VAC

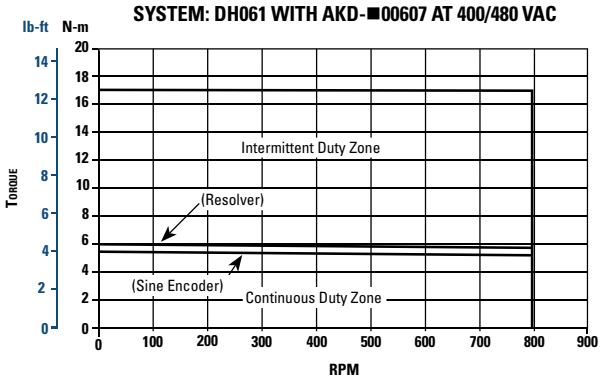

SYSTEM: DH062 WITH AKD-■00607 AT 400/480 VAC

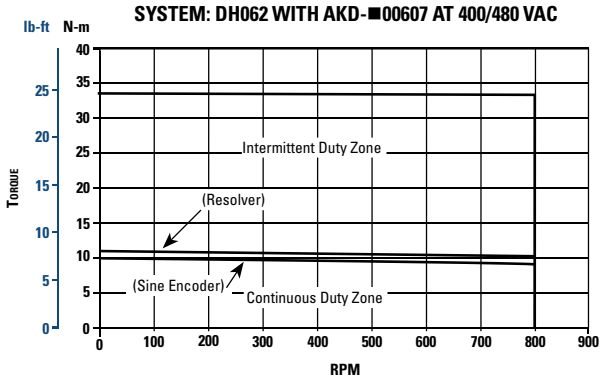

SYSTEM: DH063 WITH AKD-■00607 AT 400/480 VAC

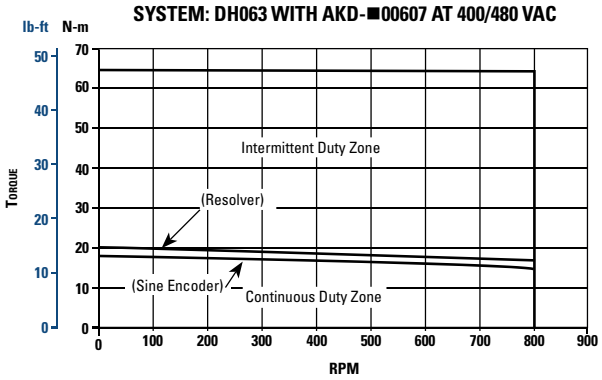

Notes:
1. For 25°C ambient, multiply by 1.06.

Housed DDR D06X Outline Drawings

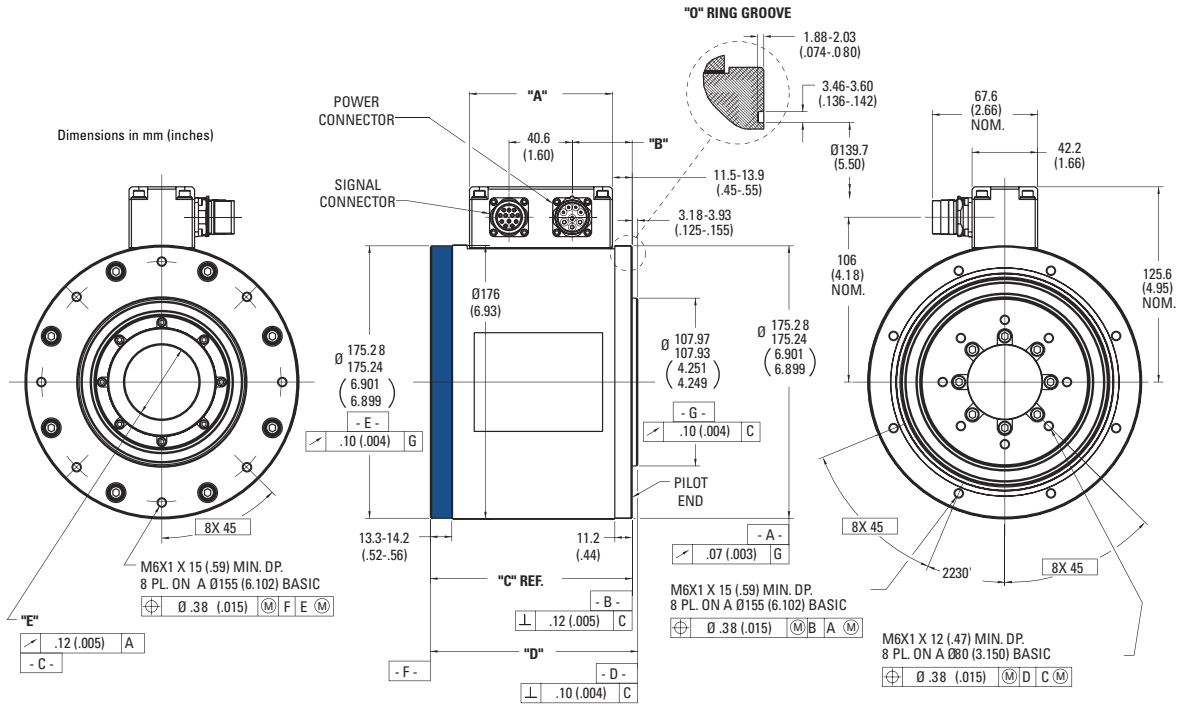

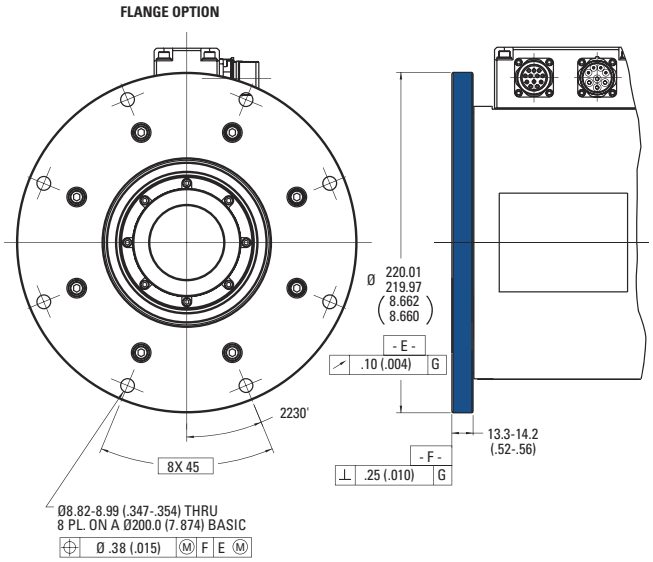

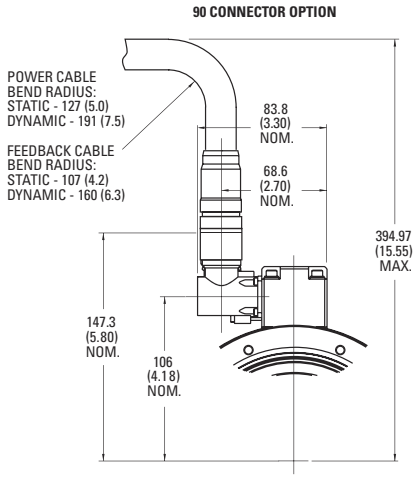

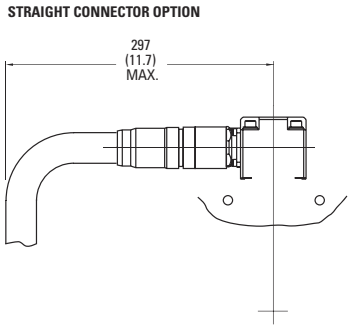

Model	"A"	"B"	"C"	"D"	"E"	
					Resolver	Sine Encoder
D061	91.9 (3.62)	37.1-40.1 (1.46-1.58)	129.42-130.171 (5.095-5.125)	132.59-134.11 (5.220-5.280)	Ø47.71-47.80 (1.878-1.882)	Ø42.88-42.98 (1.688-1.692)
D062	103.4 (4.07)	48.6-51.5 (1.91-2.03)	140.85-141.601 (5.545-5.575)	144.02-145.54 (5.660-5.730)		
D063	126.2 (4.97)	71.4-74.4 (2.81-2.93)	163.71-164.46 (6.445-6.475)	166.88-168.40 (6.570-6.630)		

Note: Dimensions "C" and "D" increase by 7.90mm (0.311") on sine encoder models with IP65 or IP67 seals.