Housed DDR D08X Performance Data

230 VAC

System Performance:		Symbols	Units	D081A/D081M	D082A/D082M	D083A/D083M
Peak Torque		Tp	lb-ft (N-m)	33.2 (45.0)	68.0 (92.2)	118 (160)
Continuous[1] Torque 40°C	Sine Encoder	Tc	lb-ft (N-m)	11.7 (15.9)	19.1 (25.9)	37.2 (50.4)
	Resolver	Tc	lb-ft (N-m)	13.0 (17.6)	21.2 (28.7)	41.3 (56.0)
Max. Operating Speed		N max	rpm (rps)	500 (8.3)	300 (5.0)	250 (4.2)
Sine Encoder System	Resolution	-	counts/rev	134,217,728	134,217,728	134,217,728
	Repeatability	-	arc/sec	< 1	< 1	< 1
	Accuracy	-	arc/sec	±26	±26	±26
Resolver System	Resolution	-	counts/rev	134,217,728	134,217,728	134,217,728
	Repeatability	-	arc/sec	±2.4	±2.4	±2.4
	Accuracy	-	arc/sec	±140	±140	±140
Mechanical:						
Weight		Wt	lb (kg)	39.5 (17.9)	47.5 (21.5)	63.6 (28.8)
Rotor Inertia		Jm	lb-ft-sec^2 (kg-m^2)	0.0106 (0.0144)	0.0143 (0.0194)	0.0222 (0.0301)
Static Friction Adder for Sealed Units		Tf	lb-ft (N-m)	2.0 (2.7)	2.0 (2.7)	2.0 (2.7)
Max. Dynamic Axel Compression Load (See page 11 for details)		-	lbf (kg)	7,400 (3,360)	7,400 (3,360)	7,400 (3,360)

SYSTEM: D081 WITH AKD-■00606 AT 230 VAC

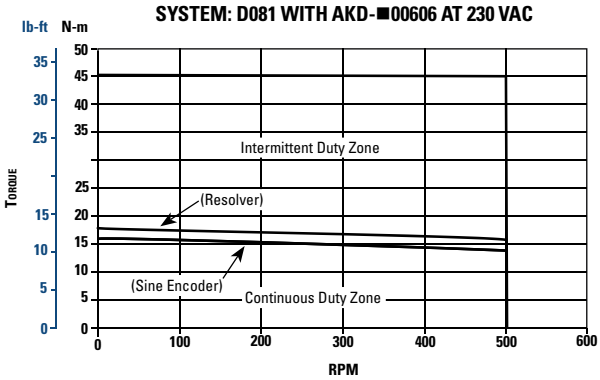

SYSTEM: D082 WITH AKD-■00606 AT 230 VAC

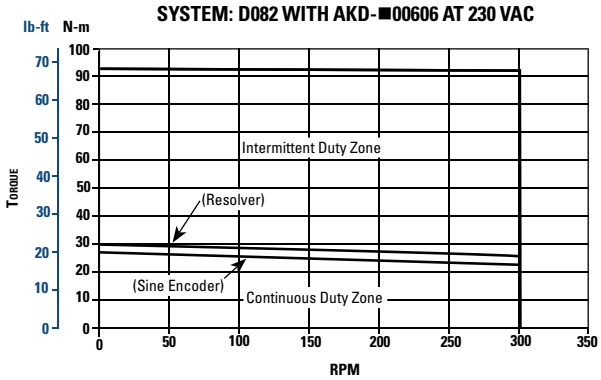

SYSTEM: D083 WITH AKD-X00606 AT 230 VAC

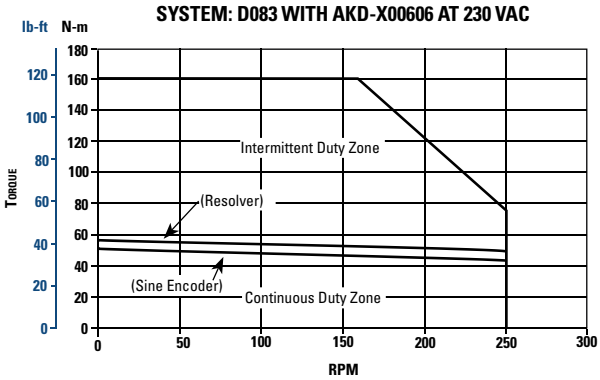

Notes:
1. For 25°C ambient, multiply Tc by 1.06.
2. Curves for 230 V applicable to single or three phase input power.

400/480 VAC

System Performance:		Symbols	Units	DH081A/DH081M	DH082A/DH082M	DH083A/DH083M
Peak Torque		Tp	lb-ft (N-m)	33.2 (45.0)	68.0 (92.2)	118 (160)
Continuous[1] Torque 40°C	Sine Encoder	Tc	lb-ft (N-m)	11.7 (15.9)	19.1 (25.9)	37.2 (50.4)
	Resolver	Tc	lb-ft (N-m)	13.0 (17.6)	21.2 (28.7)	41.3 (56.0)
Max. Operating Speed 400/480 V 3 Phase		N max	rpm (rps)	500 (8.3)	500 (8.3)	400/500 (6.7/8.3)
Sine Encoder System	Resolution	-	counts/rev	134,217,728	134,217,728	134,217,728
	Repeatability	-	arc/sec	< 1	< 1	< 1
	Accuracy	-	arc/sec	±26	±26	±26
Resolver System	Resolution	-	counts/rev	134,217,728	134,217,728	134,217,728
	Repeatability	-	arc/sec	±2.4	±2.4	±2.4
	Accuracy	-	arc/sec	±140	±140	±140
Mechanical:						
Weight		Wt	lb (kg)	39.5 (17.9)	47.5 (21.5)	63.6 (28.8)
Rotor Inertia		Jm	lb-ft-sec^2 (kg-m^2)	0.0106 (0.0144)	0.0143 (0.0194)	0.0222 (0.0301)
Static Friction Adder for Sealed Units		Tf	lb-ft (N-m)	2.0 (2.7)	2.0 (2.7)	2.0 (2.7)
Max. Dynamic Axel Compression Load (See Page 11 for Details)		-	lbf (kg)	7,400 (3,360)	7,400 (3,360)	7,400 (3,360)

SYSTEM: DH081 WITH AKD-■00607 AT 400/480 VAC

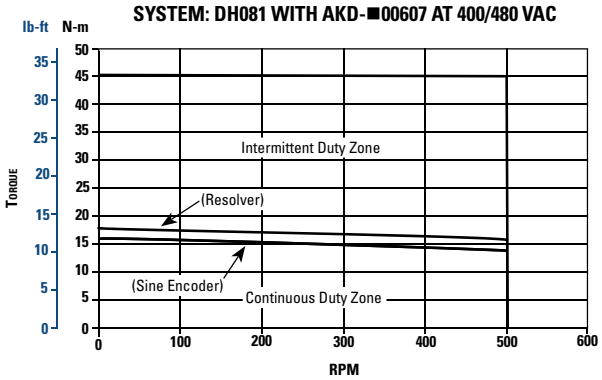

SYSTEM: DH082 WITH AKD-■00607 AT 400/480 VAC

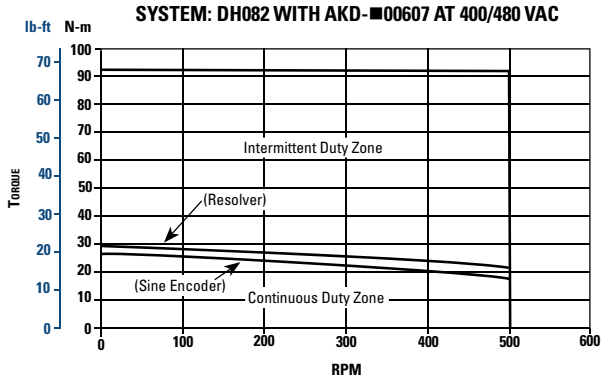

SYSTEM: DH083 WITH AKD-■00607 AT 400/480 VAC

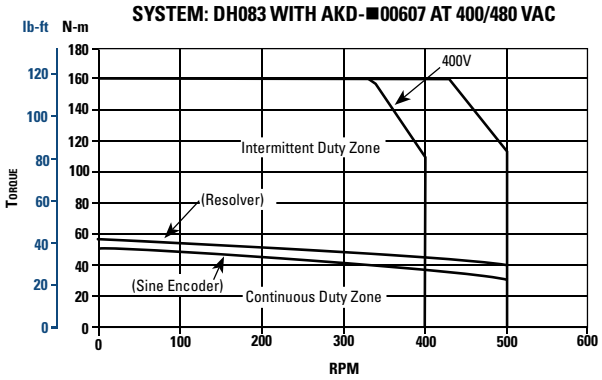

Notes:
1. For 25°C ambient, multiply by 1.06.

Housed DDR D08X Outline Drawings

Dimensions in mm (inches)

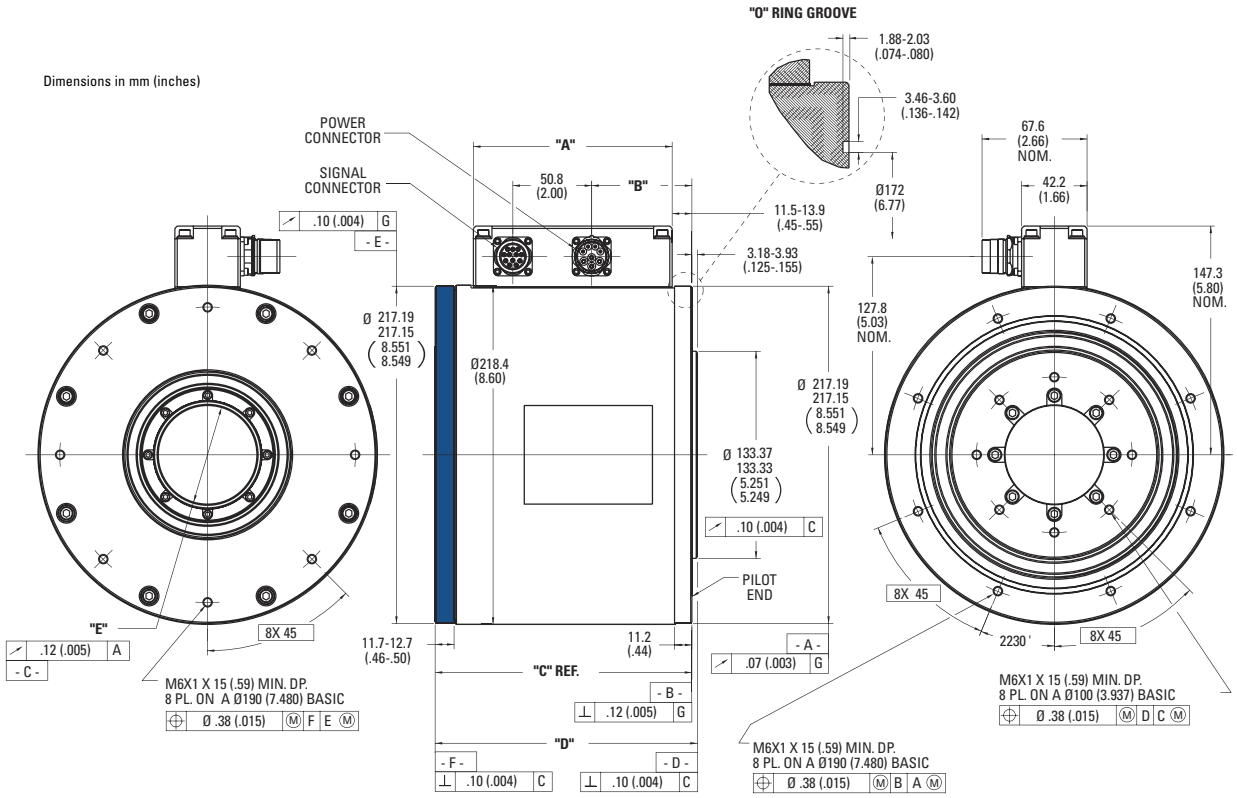

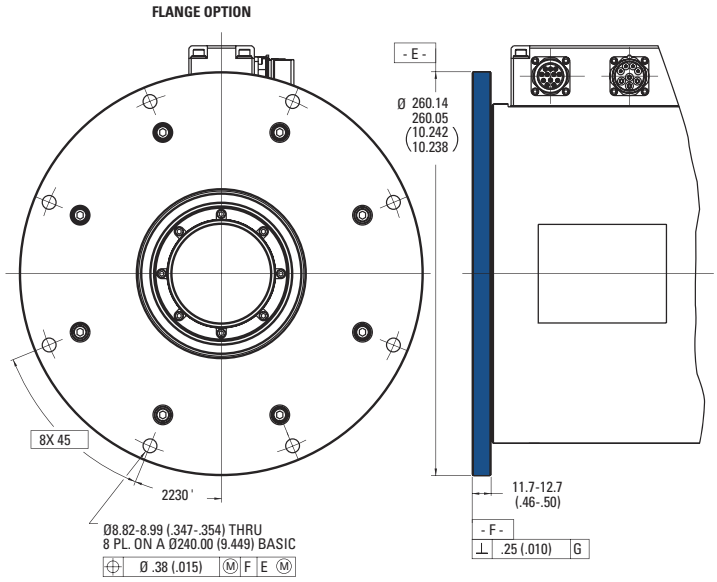

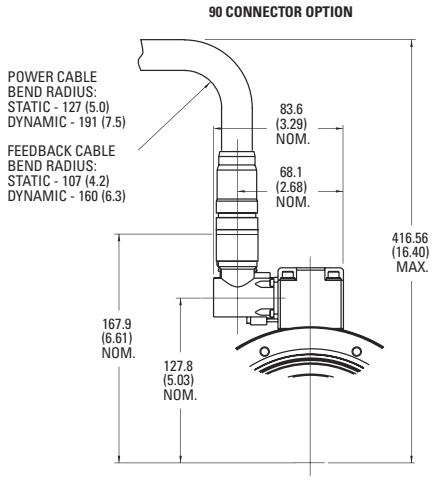

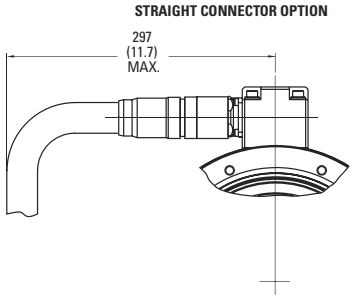

Model	"A"	"B"	"C"	"D"	"E"	
					Resolver	Sine Encoder
D081	107.7 (4.24)	42.7-45.7 (1.68-1.80)	144.66-145.41 (5.695-5.725)	147.83-149.35 (5.820-5.880)	Ø63.45-63.55 (2.498-2.502)	Ø42.88-42.98 (1.688-1.692)
D082	128.0 (5.04)	63.0-66.0 (2.48-2.60)	164.98-165.73 (6.495-6.525)	168.15-169.67 (6.620-6.680)		
D083	168.7 (6.64)	71.4-74.4 (4.08-4.20)	163.71-164.46 (8.095-8.125)	166.88-168.40 (8.220-8.280)		

Dimensions "C" and "D" increase by 8.64mm (0.340") on sine encoder models with IP65 or IP67 seals.