EK1

WITH KEYWAY CONNECTION

0.5 - 2,150 Nm

PROPERTIES

FEATURES

- press fit design
- readily modified for custom dimensions
- low backlash (keyway)

MATERIAL

- **Hubs:** up to size 450 high strength aluminum; size 800 steel
- **Elastomer:** wear resistant thermally stable TPU

DESIGN

Two concentrically machined hubs with curved jaws, keyways, and set screws.

Optional:
Conical bores for Fanuc motors and other tapered shafts available.

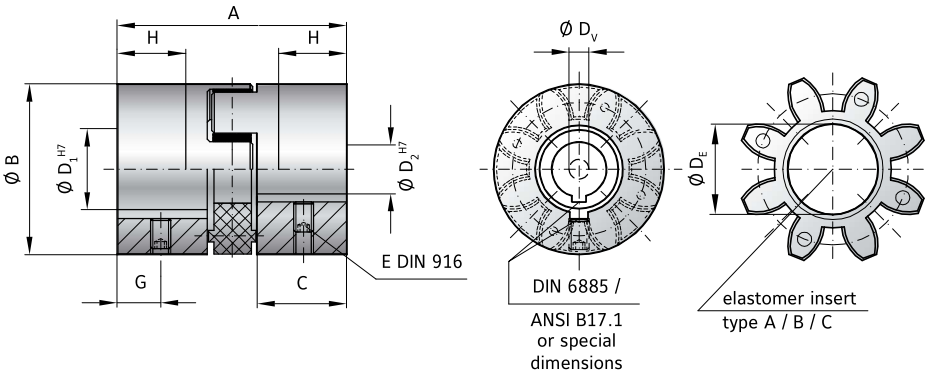

MODEL EK1

SIZE			2			5			10			20			60			150			300			450			800		
Type (Elastomer insert)			A	B	C	A	B	C	A	B	C	A	B	C	A	B	C	A	B	C	A	B	C	A	B	C	A	B	C
Rated torque	(Nm)	T_{KN}	2	2.4	0.5	9	12	2	12.5	16	4	17	21	6	60	75	20	160	200	42	325	405	84	530	660	95	950	1100	240
Max. torque	(Nm)	T_{Kmax}	4	4.8	1	18	24	4	25	32	6	34	42	12	120	150	35	320	400	85	650	810	170	1060	1350	190	1900	2150	400
Overall length	(mm)	A	20			34			35			66			78			90			114			126			162		
Outside diameter	(mm)	B/B_1	15			25			32			42			56			66.5			82			102			136.5		
Mounting length	(mm)	C	6.5			12			12			25			30			35			45			50			65		
Inside diameter (pilot bored)	(mm)	D_V	3			4			6			7			9			14			16			22			29		
Inside diameter range H7	(mm)	$D_{1/2}$	3 - 9			6 - 15			6 - 18			8 - 25			12 - 32			19 - 38			20 - 45			28 - 60			32 - 80		
Inside diameter of elastomer	(mm)	D_E	6.2			10.2			14.2			19.2			26.2			29.2			36.2			46.2			60.5		
Set screws (DIN 916)		E	see table (depending on bore Ø)**																										
Distance	(mm)	G	3			5			6			9			11			12			15			17			30		
Possible shortening length	(mm)	H	4			6			6			19			22			26			32			37			43		
Moment of inertia per hub	(10^{-3} kgm²)	J_1/J_2	0.0001			0.001			0.003			0.02			0.06			0.1			0.4			1.1			12		
Approx. weight	(kg)		0.008			0.03			0.08			0.15			0.35			0.6			1.1			1.7			11		
Speed standard	(min^{-1})		15,000			15,000			13,000			12,500			11,000			10,000			9,000			8,000			4,000		
Speed balanced	($10^3 min^{-1}$)		60	67	45	57	65	43	53	63	40	45	60	35	31	31	25	22	26	18	22	26	16	16	17	12	13	13	8

For information on shaft misalignment, torsional stiffness, and other details about the elastomer inserts **see pages 72 + 73.**

** set screw size							
D_1/D_2	- Ø 10	Ø 10.1 - 12	Ø 12.1 - 30	Ø 30.1 - 60	Ø 60.1 - 95	Ø 95.1 - 130	Ø 130.1 - 170
E	M3	M4	M5	M8	M10	M12	M16

EK1

WITH KEYWAY CONNECTION

1,950 - 25,000 Nm

PROPERTIES

FEATURES

- press fit design
- readily modified for custom dimensions
- low backlash (keyway)

MATERIAL

- **Hubs:** GGG40
- **Elastomer:** wear resistant thermally stable TPU

DESIGN

Two concentrically machined hubs with curved jaws, keyways, and set screws. Elastomer insert consist of 5 segments.

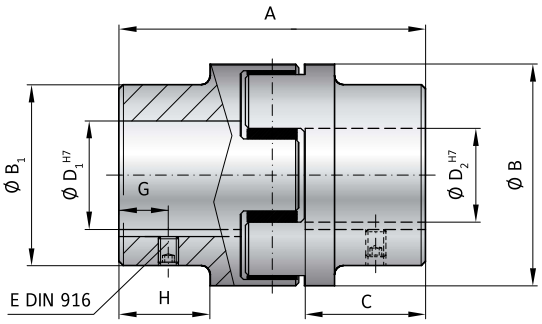

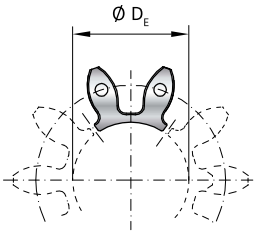

elastomer insert type A / B

MODEL EK1

SIZE			2500		4500		9500	
Type (Elastomer insert)			A	B	A	B	A	B
Rated torque	(Nm)	T_{KN}	1950	2450	5000	6200	10000	12500
Max. torque	(Nm)	T_{Kmax}	3900	4900	10000	12400	20000	25000
Overall length	(mm)	A	213		272		341	
Outside diameter	(mm)	B/B_1	160 / 154		225 / 190		290 / 240	
Mounting length	(mm)	C	88		113		142	
Inside diameter (pilot bored)	(mm)	D_V	30		40		50	
Inside diameter range H7	(mm)	$D_{1/2}$	30 - 95		40 - 130		50 - 170	
Inside diameter of elastomer	(mm)	D_E	80		111		145	
Set screws (DIN 916)		E	see table (depending on bore Ø)**					
Distance	(mm)	G	25		30		40	
Possible shortening length	(mm)	H	69		89		110	
Moment of inertia per hub	(10^{-3} kgm²)	J_1/J_2	40		147		480	
Approx. weight	(kg)		12.5		25		53	
Speed standard	(min^{-1})		3,500		3,000		2,000	
Speed balanced	($10^3 min^{-1}$)		10	10	8	8	6.5	6.5

For information on shaft misalignment, torsional stiffness, and other details about the elastomer inserts see pages 72 + 73.

ORDERING EXAMPLE	EK1	2500	A	50.8	80	XX
Model	●					Special designation only (e.g. special bore tolerance).
Size		●				
Elastomer insert type			●			
Bore D1 H7				●		
Bore D2 H7					●	

For custom features place an XX at the end of the part number and describe the special requirements (e.g. EK1 / 2500 / A / 50.8 / 80 / XX; XX=stainless steel)