2.30 Boschert Chuck 30-40

30-40 STO ***Boschert*** foot mounted chuck without shaft end
30-40 STW ***Boschert*** foot mounted chuck with shaft end
30-40 FLO ***Boschert*** flange mounted chuck without shaft end
30-40 FLW ***Boschert*** flange mounted chuck with shaft end

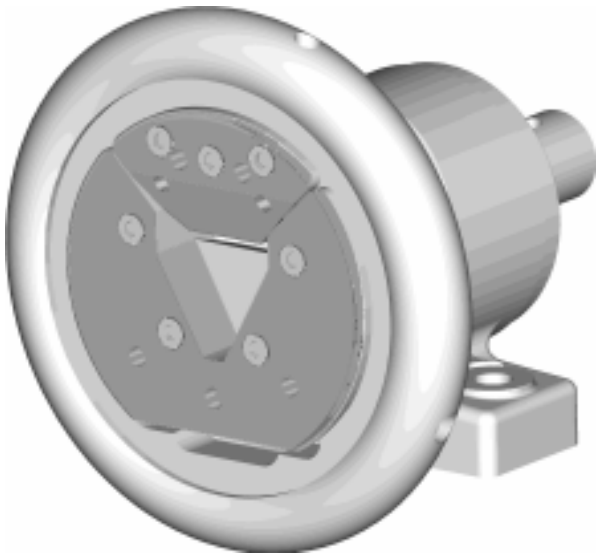

Beam weight max.: max. 1600 kg **(max. 3530 lbs)**
Square bar: **30 mm - 40 mm (1.1811“ - 1.5748“)**
Torque: **350 Nm (250 ft/lb)**

Checkbox !

Options						**Info**
VT-insert:	☐	without	☐ VT1	☐ VT2		
	☐	VT6	☐ VT7	☐ special		
Hardness:	☐	52 HRC	☐ 58 HRC	☐ special HRC		2.33
Model:	☐	pillow block	☐ flange chuck			
	☐	90° foot	☐ extented chuck			5.40/5.41
	☐	opening angle ±30°				5.43
Journal shaft type:	☐	without	☐ standard shaft	☐ special		2.33
Handwheel lock:	☐	without	☐ lock type I	☐ lock type II		
			☐ left	☐ right		2.33
	(We recommend handwheel locks on applications in turret winders)					
Add. parts:	☐	without	☐ clutch	☐ drive		7.00
	☐	brake				6.00
Speed:	☐	<50 rpm	☐ 50 – 1000 rpm	☐ >1000 rpm		

Inquiry- and order form see chapter 9.00

Mattenstraße 1
79541 Lörrach-Hauingen
infokl@boschert.de
www.boschert.de
Tel.: 07621 / 95 93 24 – 26
Fax: 07621 / 55 184

(a) Changes reserved

Boschert-Chuck
foot mounted chuck 30-40

Boschert-Chuck 30-40 type C

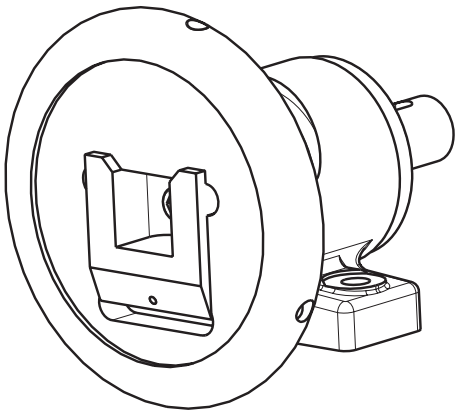

Boschert-Chuck 30-40 type VT

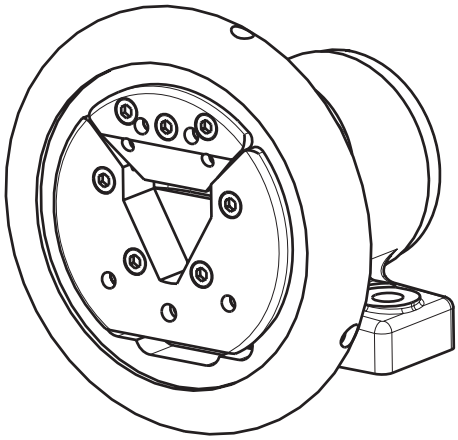

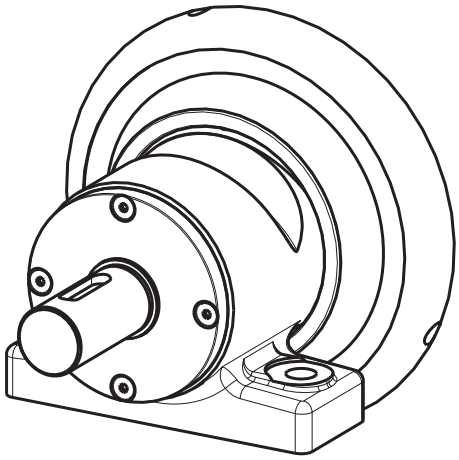

STW 30-40
chuck with shaft end

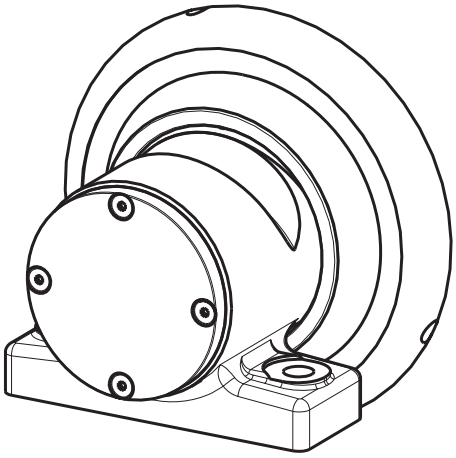

STO 30-40
chuck without shaft end

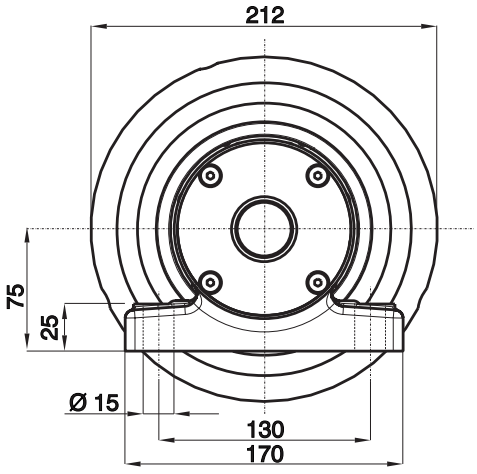

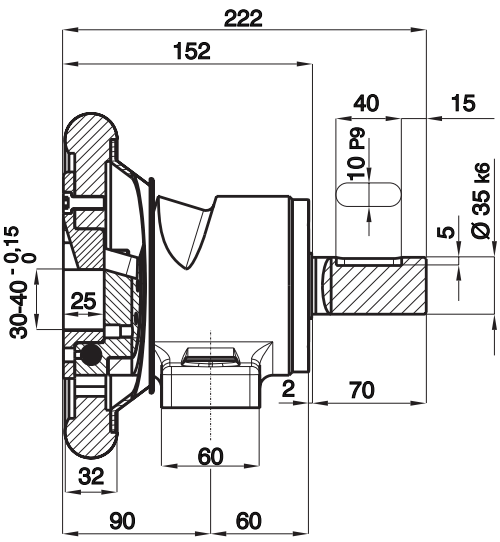

2.31

Mattenstraße 1
79541 Lörrach-Hauingen

infokl@boschert.de
www.boschert.de

Tel.: 07621 / 95 93 24 – 26
Fax: 07621 / 55 184

Changes reserved

Boschert-Chuck
flange mounted chuck 30-40

Boschert-Chuck 30-40 type C

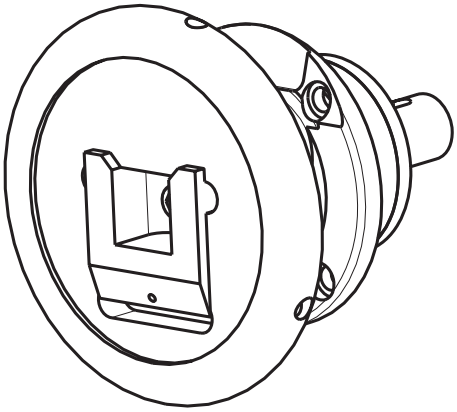

Boschert-Chuck 30-40 type VT

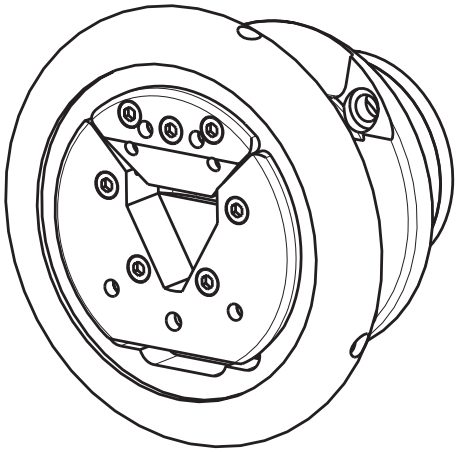

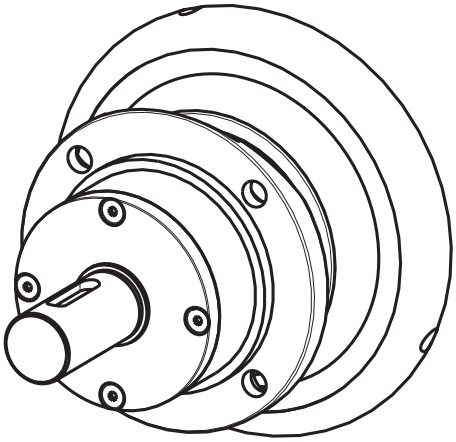

FLW 30-40
chuck with shaft end

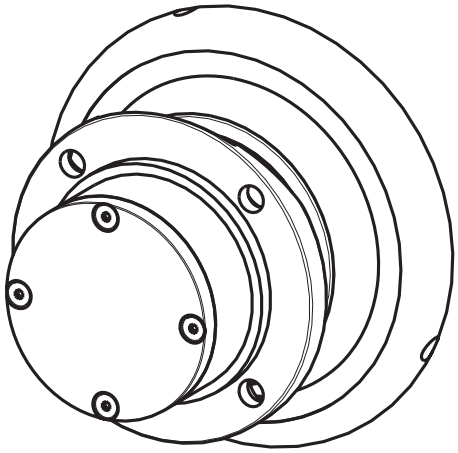

FLO 30-40
chuck without shaft end

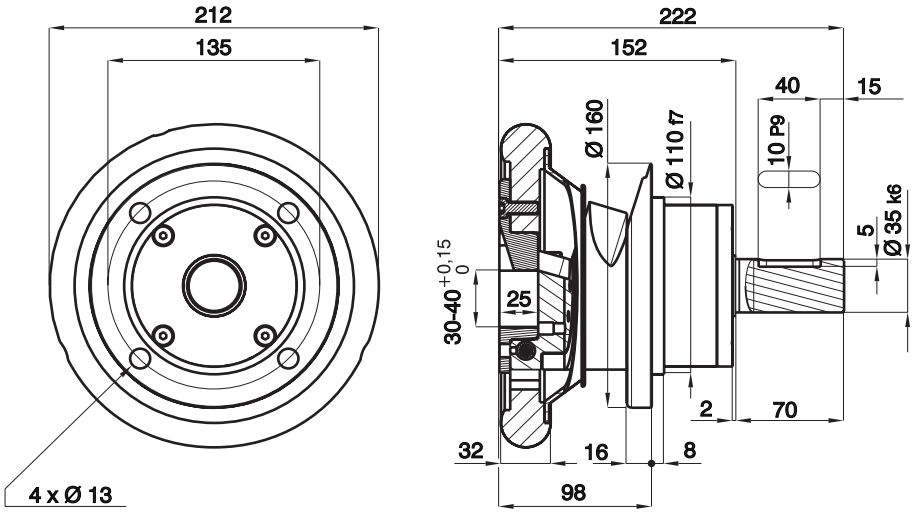

We recommend handwheel locks on applications in turret winders.

Handwheel-diameter on chucks with lock type II: Ø 250 mm

Mattenstraße 1
79541 Lörrach-Hauingen

infokl@boschert.de
www.boschert.de

Tel.: 07621 / 95 93 24 – 26
Fax: 07621 / 55 184

Changes reserved

Boschert-Chuck
Options 30-40

VT-insert

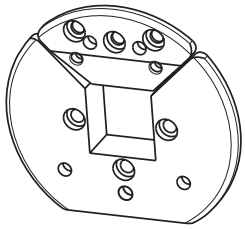

VT 1

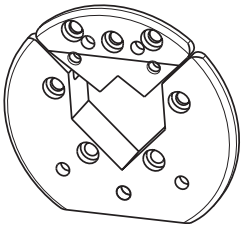

VT 2

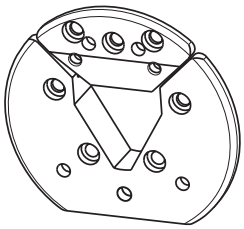

VT 6

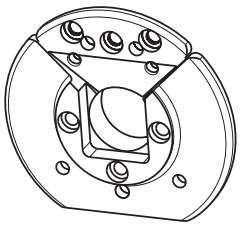

VT 7

For VT2 and VT 6 a radial driver is necessary. See information page 5.23

Info 5.30 | Info 5.31 | Info 5.32 | Info 5.33

Shaft ends

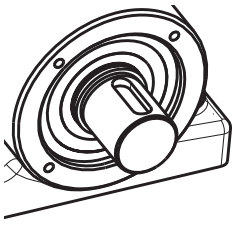

ESB

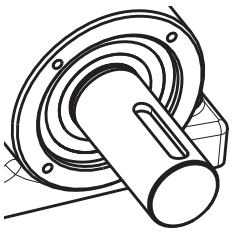

ESB i

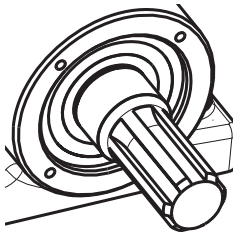

DSB

RU

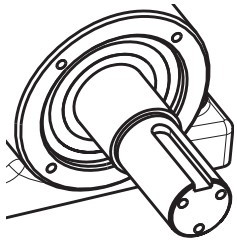

HRU

Above shaft ends are only available together with Boschert-components.

Info 5.50

Special shaft ends on customer request

Max. shaft-dia.: Ø 50 mm (special shaft without stop)

Handwheel lock

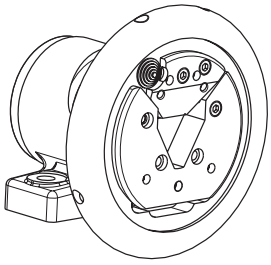

HRV I lleft

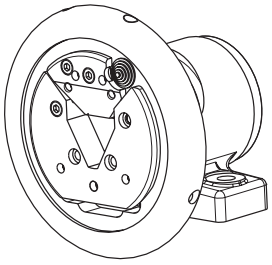

HRV I right

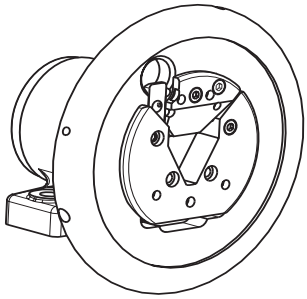

HRV II left

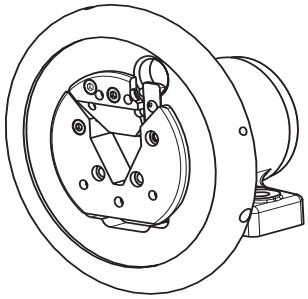

HRV II right

We recommend handwheel locks on applications in turret winders.

Info 5.44 | Info 5.45

Handwheel-diameter on chucks with lock type II: Ø 250mm

Mattenstraße 1
79541 Lörrach-Hauingen
infokl@boschert.de
www.boschert.de
Tel.: 07621 / 95 93 24 – 26
Fax: 07621 / 55 184

Changes reserved (a)