# ZA

# WITH CLAMPING HUB

10 - 800 Nm

## PROPERTIES

### FEATURES

- for spanning larger distances between shaft ends
- standard lengths up to 6 meters
- no intermediate support bearings required
- extremely straight and laterally stiff intermediate tube

### MATERIAL

- **Bellows:** high grade stainless steel
- **Intermediate tube:** up to size 150 aluminum, size 300 and up steel, optional CFK
- **Hubs:** up to size 60 aluminum, size 150 and up steel

### DESIGN

Two clamping hubs with a single clamping screw in each. A special support system carries the weight of the tube on the hubs. Operable temperature range from -30 to +100 °C.

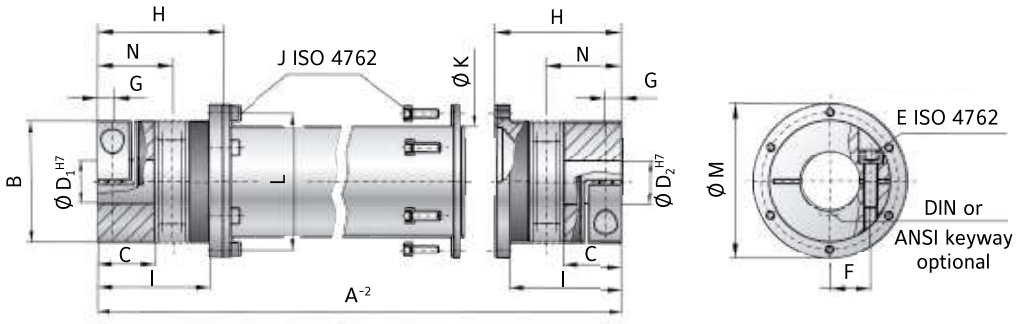


## MODEL ZA

| SIZE | | | 10 | 30 | 60 | 150 | 200 | 300 | 500 | 800 |
|---|---|---|---|---|---|---|---|---|---|---|
| Rated torque | (Nm) | $T_{KN}$ | 10 | 30 | 60 | 150 | 200 | 300 | 500 | 800 |
| Overall length min. to max. | (mm) | $A^{-2}$ | 110 - 6000 | 140 - 6000 | 170 - 6000 | 215 - 6000 | 215 - 6000 | 250 - 6000 | 260 - 6000 | 260 - 6000 |
| Outside diameter clamping hub | (mm) | B | 40 | 55 | 66 | 81 | 90 | 110 | 123 | 134 |
| Fit length | (mm) | C | 16 | 27 | 31 | 35.5 | 40.5 | 43 | 50 | 48 |
| Inside diameter from Ø to Ø H7 | (mm) | $D_{1/2}$ | 5 - 20 | 10 - 28 | 12 - 32 | 19 - 42 | 22 - 45 | 30 - 60 | 35 - 60 | 40 - 72 |
| With keyway max. Ø H7 | (mm) | $D_{1/2}$ | 17 | 23 | 29 | 36 | 45 | 60 | 60 | 66 |
| ISO 4762 clamping screw | | E | M4 | M6 | M8 | M10 | M12 | M12 | M16 | 2x M16 |
| Tightening torque | (Nm) | | 5 | 15 | 40 | 70 | 110 | 130 | 200 | 250 |
| Distance between centers | (mm) | F | 15 | 19 | 23 | 27 | 31 | 39 | 41 | 48 |
| Distance | (mm) | G | 5 | 7.5 | 9.5 | 11 | 12.5 | 13 | 17 | 18 |
| Length bellows body | (mm) | H | 44.5 | 57.5 | 71 | 78 | 86 | 94 | 110 | 101 |
| Distance | (mm) | I | 38.5 | 51 | 61 | 69 | 75.5 | 81 | 96 | 89 |
| ISO 4762 clamping screw | | J | 4x M4 | 6x M4 | 6x M5 | 8x M6 | 8x M6 | 8x M8 | 8x M8 | 10x M8 |
| Tightening torque | (Nm) | | 3 | 4 | 7 | 10 | 12 | 30 | 30 | 40 |
| Outside diameter tube section | (mm) | K | 35 | 50 | 60 | 76 | 90 | 100 | 110 | 120 |
| Bolt hole circle Ø | (mm) | L | 45 | 62.5 | 71.5 | 88 | 100 | 120 | 132 | 138 |
| Outside diameter flange | (mm) | M | 52 | 70 | 80 | 98 | 110 | 135 | 148 | 153 |
| Shaft average value | (mm) | N | 25 | 34 | 41 | 47 | 52 | 56 | 66 | 64 |

For maximum misalignment values see page 16.

| ORDERING EXAMPLE | ZA | 10 | 1551 | 18 | 19.05 | XX |
|---|---|---|---|---|---|---|
| **Model** | ● | | | | | Special designation only (e.g. special bore tolerance). |
| **Size** | | ● | | | | |
| **Overall length mm** | | | ● | | | |
| **Bore D1 H7** | | | | ● | | |
| **Bore D2 H7** | | | | | ● | |
| For custom features place an XX at the end of the part number and describe the special requirements (e.g. ZA / 10 / 1551 / 18 / 19.05 / XX; XX=anodized aluminum) | | | | | | |

# ZA

# WITH CONICAL CLAMPING SYSTEM

1,500 - 4,000 Nm

## PROPERTIES

### FEATURES

- for spanning larger distances between shaft ends
- standard lengths up to 6 meters
- no intermediate support bearings required
- extremely straight and laterally stiff intermediate tube

### MATERIAL

- **Bellows:** high grade stainless steel
- **Intermediate tube:** steel, optional CFK
- **Hubs:** steel

### DESIGN

Two conical clamping bushings with separate screws for mounting and dismounting. A special support system carries the weight of the tube on the hubs. Operable temperature range from -30 to +100 °C.

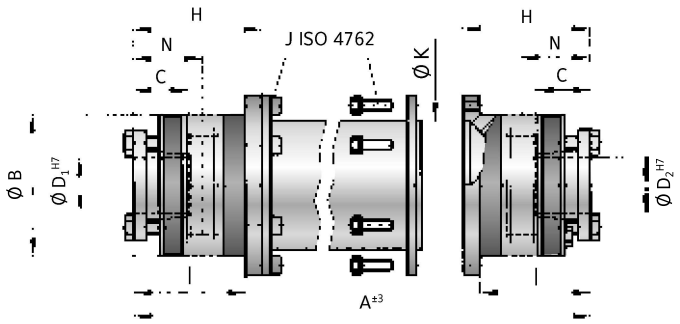


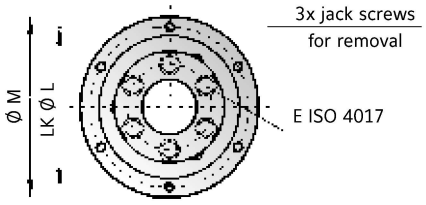


## MODEL ZA

| SIZE | | | 1500 | 4000 |
|---|---|---|---|---|
| Rated torque | (Nm) | $T_{KN}$ | 1500 | 4000 |
| Overall length min. to max. | (mm) | $A^{\pm 3}$ | 280 - 6000 | 280 - 6000 |
| Outside diameter | (mm) | B | 157 | 200 |
| Fit length | (mm) | C | 61 | 80.5 |
| Inside diameter from Ø to Ø H7 | (mm) | $D_{1/2}$ | 35 - 70 | 40 - 100 |
| ISO 4017 clamping screws | | E | 6 x M12 | 6 x M16 |
| Tightening torque | (Nm) | | 70 | 120 |
| Length bellows body | (mm) | H | 98 | 103.5 |
| Distance | (mm) | I | 82 | 84 |
| ISO 4762 clamping screws | | J | 10x M10 | 12x M12 |
| Tightening torque | (Nm) | | 70 | 120 |
| Outside diameter tube section | (mm) | K | 150 | 160 |
| Bolt hole circle Ø | (mm) | L | 168 | 193 |
| Outside diameter flange | (mm) | M | 184 | 213 |
| Shaft average value | (mm) | N | 56 | 61 |

For maximum misalignment values see page 16.

| ORDERING EXAMPLE | ZA | 1500 | 2551 | 50.8 | 70 | XX |
|---|---|---|---|---|---|---|
| **Model** | ● | | | | | Special designation only (e.g. special bore tolerance). |
| **Size** | | ● | | | | |
| **Overall length mm** | | | ● | | | |
| **Bore D1 H7** | | | | ● | | |
| **Bore D2 H7** | | | | | ● | |
| **For custom features place an XX at the end of the part number and describe the special requirements (e.g. ZA / 1500 / 2551 / 50.8 / 70 / XX; XX=stainless steel)** | | | | | | |